avigilon™
a Motorola Solutions Company

H5SL Camera Line

1.3 MP | 2 MP | 3 MP | 5 MP

Features

UNUSUAL MOTION DETECTION
Uses AI to notify you of unusual events that might otherwise have been missed, offering increased situational awareness and helping you effectively monitor more cameras.

LIGHTCATCHER™ TECHNOLOGY
Offers exceptional detail in areas with low lighting.

DUAL EXPOSURE WIDE DYNAMIC RANGE
Capture details in scenes with both very bright and dark areas.

ONVIF® COMPLIANT
Built on an open platform to allow integration with other security solutions.

MULTIPLE LENS OPTIONS
Choose from various lens types, including long zoom, for flexible coverage options.

H.265 WITH HDSM SMARTCODEC™ TECHNOLOGY
Optimizes compression levels for regions in a scene to help maximize bandwidth savings, helping to keep internet connectivity costs down.

ADAPTIVE INFRARED (IR)
Automatically adjusts IR beam width and exposure settings based on scene conditions to help maximize image quality.

RELAY I/O CONNECTIONS
Incorporate and configure input/output actions and alarms for fast event response.

MADE IN NORTH AMERICA AND 5 YEAR WARRANTY
Manufactured in North America* using globally-sourced materials and North American expertise, Avigilon stands behind the quality of its products. Backed by a 5 year warranty.

ONVIF is a trademark of Onvif, Inc.

SUPPORT asksales@avigilon.com | avigilon.com

* With manufacturing facilities in both the United States and Canada, our “Made In North America” claim only applies to products from our Plano, Texas and Richmond, British Columbia facilities.

Specifications

		1.3 MP	2.0 MP	3.0 MP	5.0 MP
IMAGE PERFORMANCE	Image Sensor	1/2.8” progressive scan CMOS			
	Aspect Ratio	5:4	16:9	4:3	4:3
	Active Pixels (H x V)	1280 x 1024	1920 x 1080	2048 x 1536	2592 x 1944
	Imaging Area (H x V)	3.2 mm x 2.56 mm; 0.126” x 0.101”	4.8 mm x 2.7 mm; 0.189” x 0.106”	5.12 mm x 3.84 mm; 0.202” x 0.151”	5.18 mm x 3.89 mm; 0.204” x 0.153”
	Max Image Rate	(50 Hz/60 Hz): 25 fps/30 fps			(50 Hz/60 Hz): 25 fps/24 fps
	Dynamic Range – WDR Off	100 dB			
	Dynamic Range – WDR On	120 dB (dual exposure)			110 dB (dual exposure)
	Resolution Scaling	Down to 384 x 216			
	Camera Operating Mode	N/A			Full feature or High framerate mode (UMD disabled in High framerate mode)
	Bandwidth Management	HDSM SmartCodec technology; Idle scene mode			
	3D Noise Reduction Filter	Yes			

			3 – 9 mm	3.1 – 8.4 mm	9.5 – 31 mm
LENS AND IR ILLUMINATION	IR Illumination Max Distance (high power 850 nm LEDs)	Dome	30 m (100 ft), full tele 20 m (65 ft), full wide	30 m (100 ft), full tele 20 m (65 ft), full wide	N/A
		Bullet	N/A	50 m (165 ft), full tele 30 m (100 ft), full wide	70 m (230 ft), full tele 30 m (100 ft), full wide
	Minimum Illumination	**1.3 MP**	With IR: 0 lux in color or monochrome mode Without IR: 0.03 lux in color mode; 0.015 lux in monochrome mode	With IR: 0 lux in color or monochrome mode Without IR: 0.04 lux in color mode; 0.02 lux in monochrome mode	N/A
		2.0 MP			N/A
		3.0 MP			With IR: 0 lux in color or monochrome mode Without IR: 0.03 lux in color mode; 0.015 lux in monochrome mode
		5.0 MP	N/A	With IR: 0 lux in color or monochrome mode Without IR: 0.02 lux in color mode; 0.01 lux in monochrome mode	With IR: 0 lux in color or monochrome mode Without IR: 0.015 lux in color mode; 0.007 lux in monochrome mode
	Horizontal Angle of View Based on Aspect Ratio	**1.3 MP**	(16:9)(4:3) 35° – 90° (5:4) 33° – 85°	(16:9)(4:3) 35° – 90° (5:4) 33° – 85°	N/A
		2.0 MP			N/A
		3.0 MP			(16:9) 10° – 32°; (5:4) 9.5° – 32°; (4:3) 9.5° – 30°
		5.0 MP	N/A	(16:9)(4:3) 35° – 90°	(16:9)(4:3) 9.5° – 30°
	Vertical Angle of View Based on Aspect Ratio	**1.3 MP**	(16:9) 20° – 49° (5:4)(4:3) 26° – 66°	(16:9) 20° – 49° (5:4)(4:3) 26° – 66°	N/A
		2.0 MP			N/A
		3.0 MP			(16:9) 6° – 17°; (5:4)(4:3) 7° – 23°
		5.0 MP	N/A	(16:9) 20° – 49°; (4:3) 26° – 66°	(16:9) 6° – 17°; (4:3) 7° – 23°
	Max Aperture		F1.4	F1.6	F1.4
	Control		P-Iris, Remote Focus and Zoom		

IMAGE CONTROL	Image Compression Method	H.264 HDSM SmartCodec, H.265 HDSM SmartCodec, Motion JPEG
	Streaming	Multi-stream H.264, Multi-stream H.265, Motion JPEG
	Motion Detection	Pixel and Unusual Motion Detection (UMD)
	Tamper Detection	Yes
	Electronic Shutter Control	Automatic, Manual (1/6 to 1/8000 sec)
	Iris Control	Automatic, Manual
	Day/Night Control	Automatic, Manual
	Flicker Control	50 Hz, 60 Hz
	White Balance	Automatic, Manual
	Backlight Compensation	Adjustable
	Privacy Zones	Up to 64 zones
AUXILIARY I/O	Audio Compression Method	Opus, G.711 PCM 8 kHz
	Audio Input/Output	Line level input and output
	External I/O Terminals	Alarm In, Alarm Out
NETWORK	Network	100BASE-TX
	Cabling Type	CAT5
	Connector	RJ-45
	ONVIF	ONVIF compliant with Profile S and Profile T (www.onvif.org)
	Security	Password protection, HTTPS encryption, digest authentication, WS authentication, user access log, 802.1x port based authentication
	Protocols	IPv6, IPv4, HTTP, HTTPS, SOAP, DNS, NTP, RTSP, RTCP, RTP, TCP, UDP, IGMP, ICMP, DHCP, Zeroconf, ARP
	Streaming Protocols	RTP/UDP, RTP/UDP multicast, RTP/RTSP/TCP, RTP/RTSP/HTTP/TCP, RTP/RTSP/HTTPS/TCP, HTTP
	Device Management Protocols	SNMP v2c, SNMP v3
PERIPHERALS	USB Port	USB 2.0
	Onboard Storage	microSD/microSDHC/microSDXC slot – minimum class 6; class 10/UHS-1 or better recommended

Specifications (Con't)

MECHANICAL (DOME)		SURFACE MOUNT	IN-CEILING MOUNT	PENDANT MOUNT	
				NPT ADAPTER	NPT + WALL MOUNT
	Dimensions (LxWxH)	147 mm x 147 mm x 119 mm; 5.8" x 5.8" x 4.7"	174 mm x 174 mm x 162 mm; 6.9" x 6.9" x 6.4"	153 mm x 153 mm x 166 mm; 6.0" x 6.0" x 6.5"	269 mm x 153 mm x 214 mm; 10.6" x 6.0" x 8.4"
	Max. Ceiling Thickness	N/A	32 mm (1.25")	N/A	N/A
	Weight	Indoor Dome — 0.76 kg; 1.68 lbs Outdoor Dome — 0.78 kg; 1.72 lbs	Indoor Dome — 0.75 kg; 1.65 lbs Outdoor Dome — 0.77 kg; 1.69 lbs	Indoor Dome — 0.75 kg; 1.65 lbs Outdoor Dome — 0.77 kg; 1.69 lbs	Indoor Dome — 2.02 kg; 4.45 lbs Outdoor Dome — 2.04 kg; 4.49 lbs
	Dome Bubble	Polycarbonate, clear			
	Body	Polycarbonate			Polycarbonate/aluminum
	Housing	Vandal resistant			
	Finish	Cool grey			Close to RAL 9003
	Adjustment Range	360° pan, ±180° azimuth, 30° – 95° tilt (recommended), 10° – 95° tilt (maximum)			

MECHANICAL (BULLET)			
	Dimensions (LxWxH)		285 mm x 131 mm x 97 mm; 11.2" x 5.1" x 3.8" (including mounting bracket)
	Weight	Camera	1.29 kg (2.84 lbs)
		Mounting Bracket	0.21 kg (0.46 lbs)
	Body		Aluminum
	Housing		Surface mount, tamper resistant, vandal resistant
	Finish		Powder coat, cool grey
	Adjustment Range		±175° pan, ±90° tilt, ±175° azimuth

ELECTRICAL			
	Power Consumption	Indoor Dome	5 W max
		Outdoor Dome	8 W max
		Bullet	9 W max
	Power Source*		PoE: IEEE802.3af Class 3 compliant
	RTC Backup Battery		3V manganese lithium

* When powered with some models of PoE++ injectors, the injectors may not power the camera correctly.

ENVIRONMENTAL			
	Operating Temperature	Indoor Dome	0 °C to +60 °C (32 °F to 140 °F)
		Bullet and Outdoor Dome	-30 °C to +60 °C (-22 °F to 140 °F)
	Storage Temperature		-10 °C to +70 °C (14 °F to 158 °F)
	Humidity		0 - 95% non-condensing

CERTIFICATIONS			
	Certifications/Directives		UL, cUL, CE, ROHS, RCM, BIS
	Safety		UL 62368-1, CSA 62368-1, IEC/EN 62368-1, IEC 62471
	Environ-mental	Bullet	IEC 62262 IK10 Impact Rating, UL/CSA/IEC 60950-22, IEC 60529 IP66 and IP67 Weather Rating
		Outdoor Dome	IEC 62262 IK10 Impact Rating, UL/CSA/IEC 60950-22, IEC 60529 IP66 and IP67 Weather Rating
	Electromagnetic Emissions		FCC Part 15 Subpart B Class B, IC ICES-003 Class B, EN 55032 Class B, EN 61000-6-3, EN 61000-3-2, EN 61000-3-3
	Electromagnetic Immunity		EN 55024, EN 61000-6-1
	Industrial EMC		EN 50130-4, EN 50121-4

Outline Dimensions

Dome Camera with Surface Mount

(H5SL-D / H5SL-DO + provided surface mount)

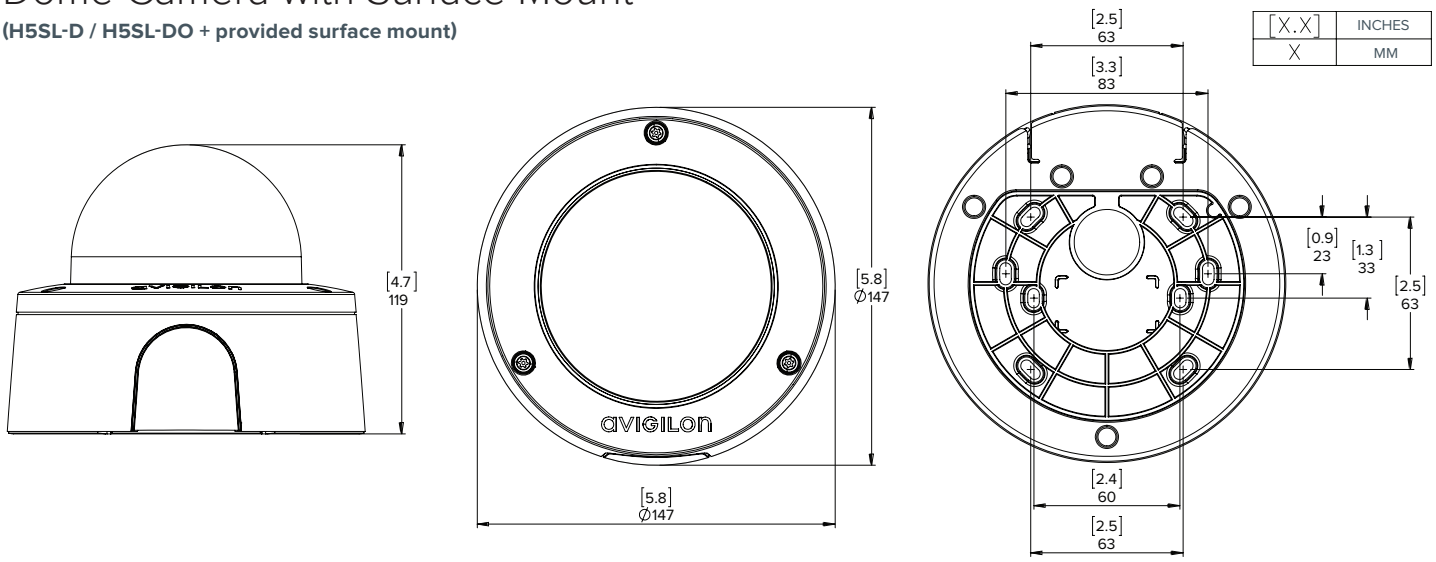

Outline Dimensions (Con't)

Dome Camera with In-Ceiling Mount

(H5SL-D/H5SL-DO + H4SL-MT-DCIL)

[X.X]	INCHES
X	MM

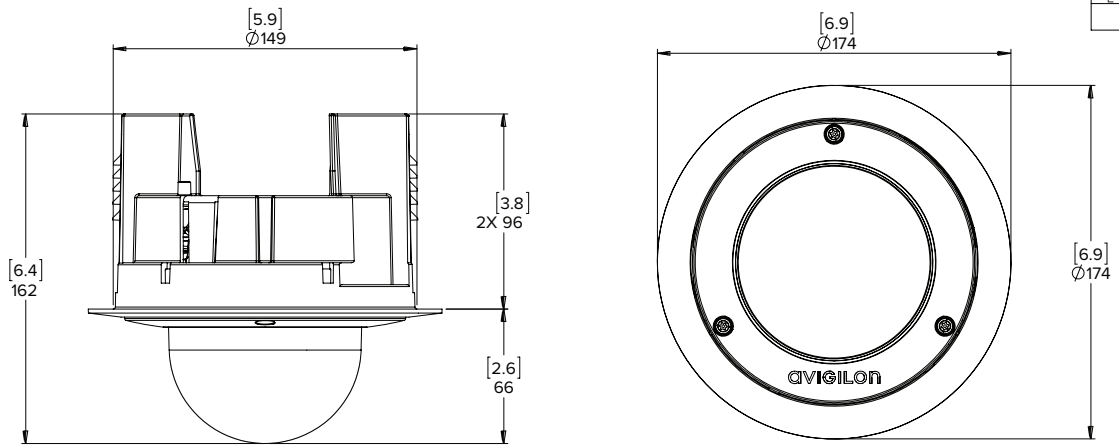

Dome Camera with NPT Adapter

(H5SL-D/H5SL-DO + H4SL-MT-NPTA)

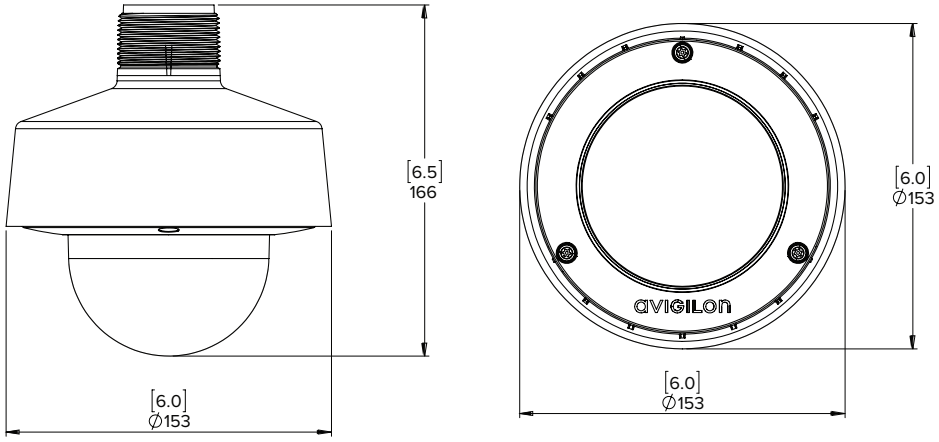

Dome Camera with NPT Adapter and Pendant Wall Mount

(H5SL-D/H5SL-DO + H4SL-MT-NPTA + CM-MT-WALL1)

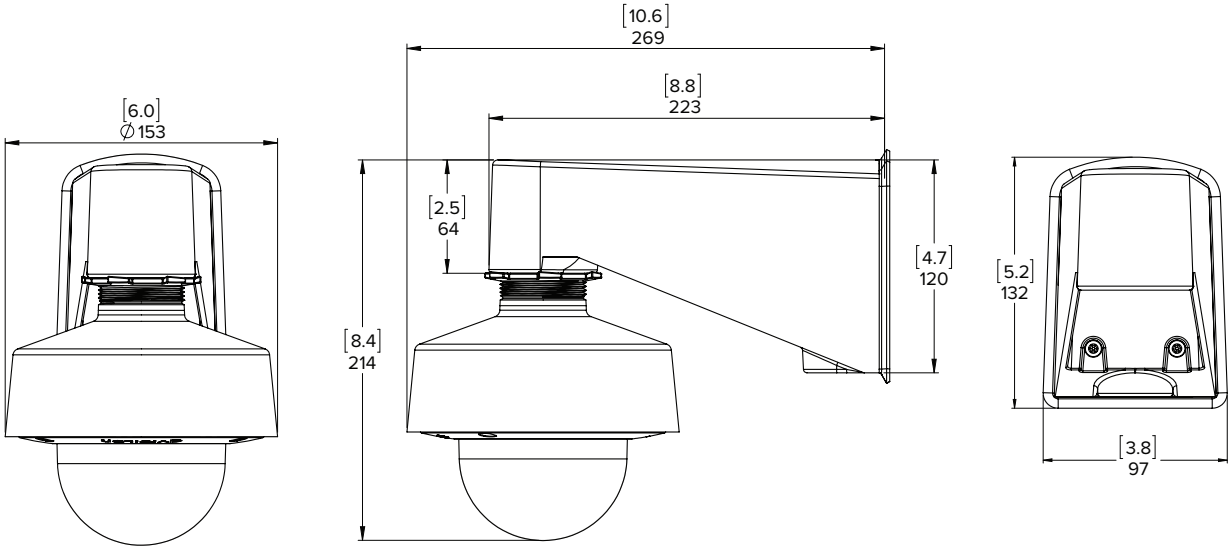

Outline Dimensions (Con't)

Bullet Camera

(H5SL-BO-IR)

LANDSCAPE MODE

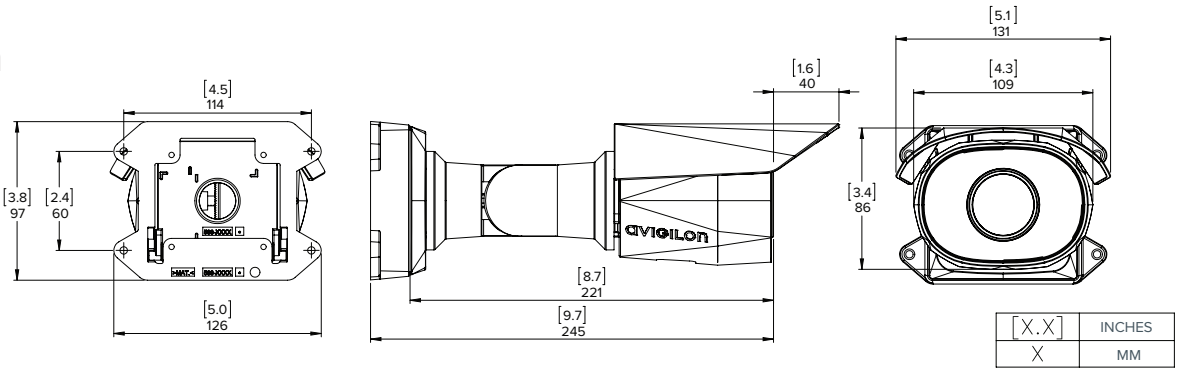

HALLWAY MODE

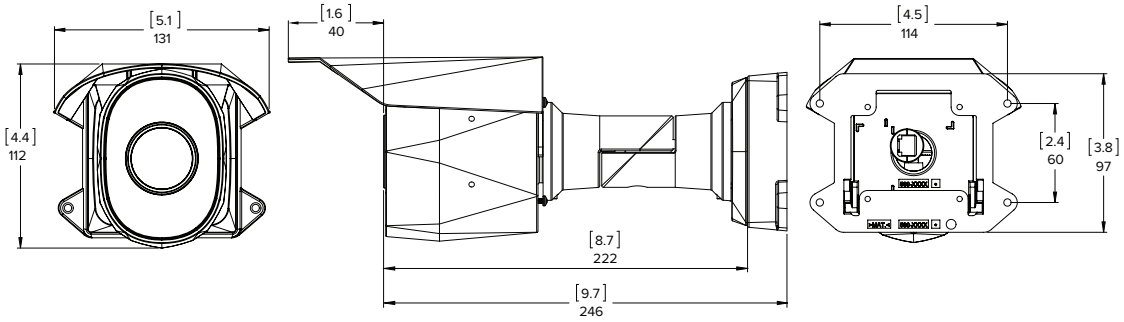

Bullet Camera Junction Box

(H4-BO-JBOX1)

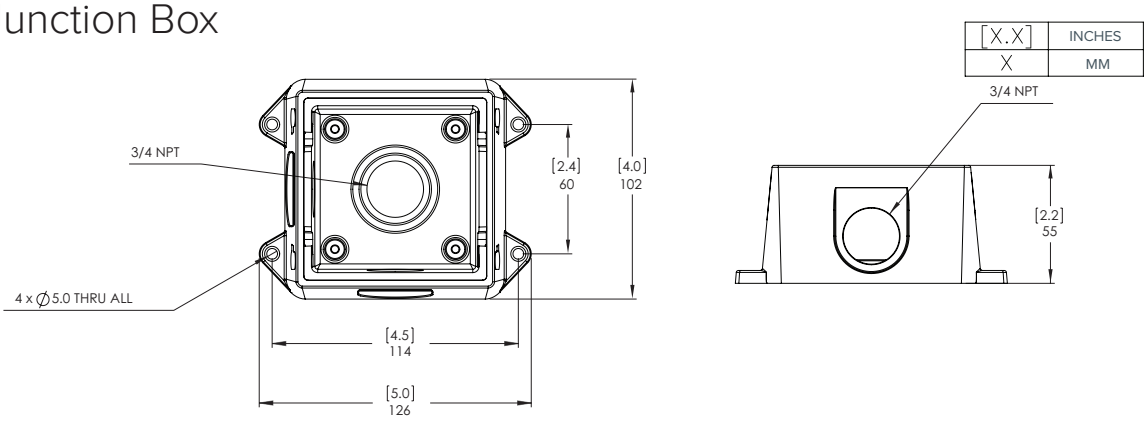

Ordering Information (Bullet)

	MP	WDR	LightCatcher Technology	Lens	IR	IP66/IP67	HDSM SmartCodec
1.3C-H5SL-BO1-IR	1.3	✓	✓	3.1 - 8.4 mm	✓	✓	✓
2.0C-H5SL-BO1-IR	2.0	✓	✓	3.1 - 8.4 mm	✓	✓	✓
3.0C-H5SL-BO1-IR	3.0	✓	✓	3.1 - 8.4 mm	✓	✓	✓
3.0C-H5SL-BO2-IR	3.0	✓	✓	9.5 - 31 mm	✓	✓	✓
5.0C-H5SL-BO1-IR	5.0	✓	✓	3.1 - 8.4 mm	✓	✓	✓
5.0C-H5SL-BO2-IR	5.0	✓	✓	9.5 - 31 mm	✓	✓	✓

H4-BO-JBOX1	Junction box for H5SL, H4SL, and H4 HD bullet cameras
H4-MT-POLE1	Aluminum pole mounting bracket
H4-MT-CRNR1	Aluminum corner mounting bracket
H4-AC-WIFI2-NA / H4-AC-WIFI2-EU	USB Wi-Fi adapter

Ordering Information (Dome)

The variety of mounting options for the H5SL dome camera provides maximum flexibility. All the available camera modules can be used in any of the mounting options.

MOUNTING SCENARIO	ORDERING INFORMATION
SURFACE MOUNT	Order one of: • Camera
IN-CEILING MOUNT	Order one of: • Camera • H4SL-MT-DCIL1 • Optional, H4-DC-CPNL1 if ceiling panel needed
PENDANT NPT MOUNT	Order one of: • Camera • H4SL-MT-NPTA1
PENDANT WALL MOUNT	Order one of: • Camera • H4SL-MT-NPTA1 • CM-MT-WALL1 • Optional, H4-MT-POLE1 or H4-MT-CRNR1 if pole or corner mount needed

	MP	WDR	LightCatcher Technology	Lens	IR	IP66/IP67	HDSM SmartCodec
1.3C-H5SL-D1	1.3	✓	✓	3 - 9 mm			✓
1.3C-H5SL-D1-IR	1.3	✓	✓	3 - 9 mm	✓		✓
1.3C-H5SL-DO1-IR	1.3	✓	✓	3.1 - 8.4 mm	✓	✓	✓
2.0C-H5SL-D1	2.0	✓	✓	3 - 9 mm			✓
2.0C-H5SL-D1-IR	2.0	✓	✓	3 - 9 mm	✓		✓
2.0C-H5SL-DO1-IR	2.0	✓	✓	3.1 - 8.4 mm	✓	✓	✓
3.0C-H5SL-D1	3.0	✓	✓	3 - 9 mm			✓
3.0C-H5SL-D1-IR	3.0	✓	✓	3 - 9 mm	✓		✓
3.0C-H5SL-DO1-IR	3.0	✓	✓	3.1 - 8.4 mm	✓	✓	✓
5.0C-H5SL-D1	5.0	✓	✓	3.1 - 8.4 mm			✓
5.0C-H5SL-D1-IR	5.0	✓	✓	3.1 - 8.4 mm	✓		✓
5.0C-H5SL-DO1-IR	5.0	✓	✓	3.1 - 8.4 mm	✓	✓	✓

H4SL-MT-DCIL1	In-ceiling mounting adapter for the H5SL and H4SL dome camera
H4SL-MT-NPTA1	NPT adapter for the H5SL and H4SL dome camera
CM-MT-WALL1	Pendant wall mount
H4-DC-CPNL1	Metal ceiling panel
H4-MT-POLE1	Aluminum pole mounting bracket
H4-MT-CRNR1	Aluminum corner mounting bracket
H4-AC-WIFI2-NA / H4-AC-WIFI2-EU	USB Wi-Fi adapter
H4SL-DD-SMOK1	Replacement outdoor smoke dome cover
H4SL-DD-CLER1	Replacement outdoor clear dome cover
H4SL-DI-SMOK1	Replacement indoor smoke dome cover
H4SL-DI-CLER1	Replacement indoor clear dome cover
H4SL-DO1-BASE	Replacement outdoor surface mount adapter
H4SL-D1-BASE	Replacement indoor surface mount adapter

© 2019, Avigilon Corporation. All rights reserved. AVIGILON, the AVIGILON logo, HDSM SmartCodec and LIGHTCATCHER are trademarks of Avigilon Corporation. ONVIF is a trademark of Onvif, Inc. Other names mentioned herein may be the trademarks of their respective owners. Avigilon Corporation protects its innovations with patents issued in the United States of America and other jurisdictions worldwide: www.avigilon.com/patents. Unless stated explicitly and in writing, no license is granted with respect to any copyright, industrial design, trademark, patent or other intellectual property rights of Avigilon Corporation or its licensors.