avigilon™
a Motorola Solutions Company

# H5A Camera Line

2 MP | 4 MP | 5 MP | 6 MP | 8 MP

## Features

### NEXT-GENERATION VIDEO ANALYTICS
Expanded object classifications and more accurate detection in crowded scenes so you can detect and act faster.

### MADE IN NORTH AMERICA AND 5 YEAR WARRANTY
Manufactured in North America* using globally-sourced materials and North American expertise, Avigilon stands behind the quality of its products. Backed by a 5 year warranty.

### H.265 WITH HDSM SMARTCODEC™ TECHNOLOGY
Optimizes compression levels for regions in a scene to help maximize bandwidth savings, helping to keep internet connectivity costs down.

### FOCUS OF ATTENTION WITH ACC™ 7
Leverages AI and video analytics technologies to determine what information is important and should be presented to security operators.

### TRUE WIDE DYNAMIC RANGE
Available in all resolutions, capture details in scenes with both very bright and dark areas.

### LIGHTCATCHER™ TECHNOLOGY
Offers exceptional detail in areas with low lighting.

### ONVIF® COMPLIANT
Built on an open platform to allow integration with other security solutions.

### MULTIPLE LENS OPTIONS
Choose from various lens types, including long zoom, for flexible coverage options.

ONVIF is a trademark of Onvif, Inc.

SUPPORT asksales@avigilon.com | avigilon.com

* With manufacturing facilities in both the United States and Canada, our “Made In North America” claim only applies to products from our Plano, Texas and Richmond, British Columbia facilities.

# Specifications

| | | | 2.0 MP | 4.0 MP | 5.0 MP | 6.0 MP | 8.0 MP (4K ULTRA HD) |
|---|---|---|---|---|---|---|---|
| **IMAGE PERFORMANCE** | Image Sensor | | 1/2.8” progressive scan CMOS | | | 1/1.8” progressive scan CMOS | |
| | Max Resolution (H x V) and Aspect Ratio | | (16:9) 1920 x 1080 | (16:9) 2560 x 1440<br>(4:3) 2304 x 1728 | (4:3) 2592 x 1944<br>(16:9) 2560 x 1440 | (16:9) 3200 x 1800<br>(3:2) 3072 x 2048 | (16:9) 3840 x 2160 |
| | Dynamic Range | WDR Off | 83 dB | 83 dB | 83 dB | 85 dB | 85 dB |
| | | WDR On | 126 dB (dual exposure, 30 fps)<br>132 dB (triple exposure, 20 fps or less) | 126 dB | 126 dB | 120 dB | 120 dB |
| | Max Image Rate | | (50 Hz/60 Hz):<br>25 fps/30 fps | WDR off (50 Hz/60 Hz): 25 fps/30 fps<br>WDR on (50 Hz/60 Hz): 20 fps/20 fps | | | |
| | Bandwidth Management | | HDSM SmartCodec technology; Idle scene mode | | | | |
| | 3D Noise Reduction Filter | | Yes | | | | |

| | | | 3.3 – 9 mm | 4.9 – 8 mm | 9 – 22 mm | 4.7 – 84.6 mm |
|---|---|---|---|---|---|---|
| **LENS AND IR ILLUMINATION** | IR Illumination Max Distance[1] (high power 850 nm LEDs) | Dome | 35 m (115 ft), full tele<br>15 m (49 ft), full wide | 30 m (98 ft), full tele<br>15 m (49 ft), full wide | N/A | N/A |
| | | Bullet | 50 m (164 ft), full tele<br>30 m (98 ft), full wide | 50 m (164 ft), full tele<br>30 m (98 ft), full wide | 90 m (295 ft), full tele<br>60 m (197 ft), full wide | N/A |
| | Minimum Illumination | **2 MP** | 0.027 lux in color mode,<br>0.014 lux in monochrome mode,<br>0 lux with IR | N/A | 0.052 lux in color mode,<br>0.026 lux in monochrome mode,<br>0 lux with IR | 0.039 lux in color mode,<br>0.02 lux in monochrome mode, |
| | | **4 MP** | 0.03 lux in color mode,<br>0.015 lux in monochrome mode,<br>0 lux with IR | N/A | 0.058 lux in color mode,<br>0.029 lux in monochrome mode,<br>0 lux with IR | N/A |
| | | **5 MP** | N/A | N/A | 0.04 lux in color mode,<br>0.02 lux in monochrome mode,<br>0 lux with IR | N/A |
| | | **6 MP** | N/A | 0.055 lux in color mode,<br>0.028 lux in monochrome mode,<br>0 lux with IR | N/A | N/A |
| | | **8 MP** | N/A | 0.055 lux in color mode,<br>0.028 lux in monochrome mode,<br>0 lux with IR | N/A | N/A |
| | Horizontal Angle of View Based on Aspect Ratio | **2 MP** | (16:9) 34° – 99° | N/A | (16:9) 14° – 31° | (16:9) 4.1° – 60° |
| | | **4 MP** | (16:9)(4:3) 34° – 92° | N/A | (16:9)(4:3) 14° – 31° | N/A |
| | | **5 MP** | N/A | N/A | (16:9)(4:3) 14° – 31° | N/A |
| | | **6 MP** | N/A | (16:9) 52° – 92°<br>(3:2) 41° – 73° | N/A | N/A |
| | | **8 MP** | N/A | (16:9) 52° – 92° | N/A | N/A |
| | Vertical Angle of View Based on Aspect Ratio | **2 MP** | (16:9) 18° – 53° | N/A | (16:9) 7.8° – 16.7° | (16:9) 2.3° – 34° |
| | | **4 MP** | (16:9) 18° – 50°<br>(4:3) 25° – 68° | N/A | (16:9) 8.2° – 17.4° | N/A |
| | | **5 MP** | N/A | N/A | (16:9) 8.1° – 17.4°<br>(4:3) 11° – 23° | N/A |
| | | **6 MP** | N/A | (16:9) 29° – 51°<br>(3:2) 27° – 48° | N/A | N/A |
| | | **8 MP** | N/A | (16:9) 29° – 51° | N/A | N/A |
| | Max Aperture | | F1.3 | F1.8 | F1.6 | F1.6 |
| | Control | | P-Iris, Remote Focus and Zoom | | | |

[1] IR illumination power may be reduced at higher operating temperatures.

| | | |
|---|---|---|
| **IMAGE CONTROL** | Image Compression Method | H.264 HDSM SmartCodec, H.265 HDSM SmartCodec, Motion JPEG |
| | Streaming | Multi-stream H.264, Multi-stream H.265, Motion JPEG;<br>HDSM 2.0 on 4.0 MP, 5.0 MP, 6.0 MP, and 4K (8.0 MP) cameras |
| | Motion Detection | Pixel motion: Selectable sensitivity and threshold. Classified object detection |
| | Camera Tamper Detection | Yes |
| | Electronic Shutter Control | Automatic, Manual (1/7 to 1/8196 sec) |
| | Iris Control | Automatic, Open, Closed |
| | Day/Night Control | Automatic, Manual |
| | Flicker Control | 60 Hz, 50 Hz |
| | White Balance | Automatic, Manual |
| | Backlight Compensation | Adjustable |
| | Privacy Zones | Up to 64 zones |

| | | |
|---|---|---|
| **NETWORK** | Network | 100BASE-TX, RJ45 Connector, CAT5e Cabling |
| | ONVIF | ONVIF compliance version 1.02, 2.00, Profile S, Profile T (www.onvif.org) |
| | Security | Password protection, HTTPS encryption, digest authentication, WS authentication, user access log, 802.1x port based authentication |
| | Protocols | IPv6, IPv4, HTTP, HTTPS, SOAP, DNS, NTP, RTSP, RTCP, RTP, TCP, UDP, IGMP, ICMP, DHCP, Zeroconf, ARP |
| | Streaming Protocols | RTP/UDP, RTP/UDP multicast, RTP/RTSP/TCP, RTP/RTSP/HTTP/TCP, RTP/RTSP/HTTPS/TCP, HTTP |
| | Device Management Protocols | SNMP v2c, SNMP v3 |

| | | | |
|---|---|---|---|
| **PERIPHERALS** | USB Port | | USB 2.0 |
| | Onboard Storage | Dome | microSD/microSDHC/microSDXC slot – class 10/UHS-1 or better recommended |
| | | Bullet and Box | SD/SDHC/SDXC slot – class 10/UHS-1 or better recommended |

# Specifications (Con't)

| | | |
|---|---|---|
| **AUXILIARY I/O** | Audio Compression Method | G.711 PCM 8 kHz |
| | Audio Input/Output | Line level input and output |
| | External I/O Terminals | Alarm In, Alarm Out |
| | RS-485 Terminal | Yes, Box camera only |

| **MECHANICAL (DOME)** | | **INDOOR SURFACE MOUNT** | **INDOOR IN-CEILING MOUNT** | **OUTDOOR SURFACE MOUNT** |
|---|---|---|---|---|
| | Dimensions (LxWxH) | 163 mm x 163 mm x 118 mm;<br>6.4" x 6.4" x 4.7" | 181 mm x 181 mm x 164 mm;<br>7.1" x 7.1" x 6.5" | 163 mm x 163 mm x 121 mm;<br>6.4" x 6.4" x 4.8" |
| | Weight | 0.99 kg (2.18 lbs) | 1.64 kg (3.62 lbs) | 1.39 kg (3.06 lbs) |
| | Dome Bubble | Polycarbonate | | |
| | Body | Plastic, Aluminum | | Aluminum |
| | Housing | Surface mount, tamper resistant | Recessed mount, tamper resistant | Surface mount, vandal resistant |
| | Finish | Plastic, gray | Plastic, gray; Aluminum, powder coat, black | Powder coat, RAL 9003 |
| | Adjustment Range | 360° pan, ±180° azimuth, 9° – 95° tilt (30° – 95° with -IR option) | | |

| **MECHANICAL (PENDANT DOME)** | | **PENDANT CAMERA ONLY** | **WITH WALL MOUNT (H4A-MT-WALL1)** | **WITH NPT MOUNT (H4A-MT-NPTA1)** |
|---|---|---|---|---|
| | Dimensions (LxWxH) | 172 mm x 172 mm x 124 mm;<br>6.8" x 6.8" x 4.9" | 275 mm x 172 mm x 152.1 mm;<br>10.8" x 6.8" x 6.0" | 172 mm x 172 mm x 172.3 mm;<br>6.8" x 6.8" x 6.8" |
| | Weight | 1.59 kg (3.51 lbs) | 3.04 kg (6.70 lbs) | 1.84 kg (4.06 lbs) |
| | Dome Bubble | Polycarbonate | | |
| | Body | Aluminum | | |
| | Housing | Pendant mount, vandal resistant | | |
| | Finish | Powder coat, RAL 9003 | | |
| | Adjustment Range | 360° pan, ±180° azimuth, 9° – 95° tilt (30° – 95° with -IR option) | | |

| **MECHANICAL (BULLET)** | | | |
|---|---|---|---|
| | Dimensions (LxWxH) | | 280 mm x 126 mm x 91 mm; 11.04" x 4.97" x 3.58" (including mounting bracket) |
| | Weight | Camera | 1.71 kg (3.77 lbs) |
| | | Mounting Bracket | 0.21 kg (0.46 lbs) |
| | Body | | Aluminum |
| | Housing | | Surface mount, tamper resistant |
| | Finish | | Powder coat, RAL 9003 |
| | Adjustment Range | | ±175° pan, ±90° tilt, ±175° azimuth |

| **MECHANICAL (BOX)** | | |
|---|---|---|
| | Dimensions (LxWxH) | 168 mm x 76 mm x 67 mm; 6.6" x 3.0" x 2.6" |
| | Weight | 0.62 kg (1.4 lbs) |
| | Body | Aluminum |
| | Camera Mount | 1/4"-20 UNC (top and bottom) |
| | Finish | Powder coat, black |

| **ELECTRICAL** | | | | | |
|---|---|---|---|---|---|
| | Power Consumption | Bullet | 13 W max | | |
| | | Dome | 13 W max (11 W with no IR or IR disabled) | | |
| | | Box | 7 W max | | |
| | Power Source | Bullet | VDC: 12 V ± 10%, 13 W min | VAC: 24 V ± 10%, 15 VA min | PoE: IEEE802.3af Class 3 compliant |
| | | Dome | VDC: 12 V ± 10%, 12 W min | VAC: 24 V ± 10%, 13 VA min | PoE: IEEE802.3af Class 3 compliant |
| | | Box | VDC: 12 V ± 10%, 7 W min | VAC: 24 V ± 10%, 9 VA min | PoE: IEEE802.3af Class 3 compliant |
| | RTC Backup Battery | | 3V manganese lithium | | |

| **ENVIRONMENTAL** | | | |
|---|---|---|---|
| | Operating Temperature | Bullet | -40 °C to +60 °C (-40 °F to 140 °F), in enclosed space<br>-40 °C to +65 °C (-40 °F to 149 °F), with ambient convection |
| | | Dome | -40 °C to +65 °C (-40 °F to 149 °F) |
| | | Box | -10 °C to +60 °C (-14 °F to 140 °F) |
| | IR Illuminator Behavior | Bullet | IR illuminator will turn off if the temperature is 61 °C (141 °F) or higher. The illuminator will operate at 50% power if the temperature is between 55 °C (131 °F) and 61 °C (141 °F). Hysteresis: 5 °C (9 °F). |
| | | Indoor Dome | IR illuminator will turn off if the temperature is 55 °C (131 °F) or higher. The illuminator will operate at 50% power if the temperature is between 44 °C (111 °F) and 55 °C (131 °F). Hysteresis: 2 °C (3.6 °F). |
| | | Outdoor Dome | IR illuminator will turn off if the temperature is 57 °C (135 °F) or higher. The illuminator will operate at 50% power if the temperature is between 49 °C (120 °F) and 57 °C (135 °F). Hysteresis: 2 °C (3.6 °F). |
| | Storage Temperature | | -10 °C to +70 °C (14 °F to 158 °F) |
| | Humidity | | 0 - 95% non-condensing |

| **CERTIFICATIONS** | | | |
|---|---|---|---|
| | Certifications/Directives | | UL, cUL, CE, ROHS, Reach (SVHC), RCM |
| | Safety | | UL 62368-1, CSA 62368-1, IEC/EN 62368-1, IEC 62471 (with -IR option) |
| | Environ-mental | Bullet | UL/CSA/IEC 60950-22, IEC 60529 IP66 and IP67 Weather Rating, IEC 62262 IK10 Impact Rating |
| | | Outdoor Dome | UL/CSA/IEC 60950-22, IEC 60529 IP66 and IP67 Weather Rating, IEC 62262 IK10 Impact Rating |
| | Electromagnetic Emissions | | FCC Part 15 Subpart B Class B, IC ICES-003 Class B, EN 55032 Class B, EN 61000-6-3, EN 61000-3-2, EN 61000-3-3 |
| | Electromagnetic Immunity | | EN 55024, EN 61000-6-1 |

# Analytics Specifications

| | | |
|---|---|---|
| **SUPPORTED ANALYTICS EVENTS** | Objects in Area | The event is triggered when the selected object type moves into the region of interest. |
| | Object Loitering | The event is triggered when the selected object type moves into the region of interest and then stays for an extended amount of time. |
| | Objects Crossing Beam | The event is triggered when the specified number of objects have crossed the directional beam that is configured over the camera's field of view. The beam can be unidirectional or bidirectional. |
| | Object Appears or Enters Area | The event is triggered by each object that enters the region of interest. This event can be used to count objects. |
| | Object Not Present in Area | The event is triggered when no objects are present in the region of interest. |
| | Objects Enter Area | The event is triggered when the specified number of objects have entered the region of interest. |
| | Objects Leave Area | The event is triggered when the specified number of objects have left the region of interest. |
| | Object Stops in Area | The event is triggered when an object moves into a region of interest and then stops moving for the specified threshold time. |
| | Direction Violated | The event is triggered when an object moves in the prohibited direction of travel. |
| | Tamper Detection | The event is triggered when the scene unexpectedly changes. |
| **SUPPORTED CLASSIFIED OBJECT TYPES** | Object Types in Outdoor Mode | Vehicle, sub-types: Car, Truck, Bicycle, Motorcycle, Bus<br>Person |
| | Object Types in Indoor Mode | Person |
| **TEACH BY EXAMPLE** | Teach By Example | Yes, when used with Avigilon Control Center™ |
| **AVIGILON CONTROL CENTER (ACC) VERSIONS SUPPORTED FEATURES** | ACC Version 6.14.12 or higher | All supported analytic events with two types of classified objects: person or vehicle.<br>Appearance search when paired with appropriate server hardware.<br>H.265 supported. |
| | ACC Version 7.2 or higher | All supported analytic events with people and vehicles and all vehicle sub-types as classified objects.<br>Appearance search when paired with appropriate server hardware.<br>H.265 supported. |

# Outline Dimensions

## Surface Mount Indoor Dome Camera

**(H5A-D)**

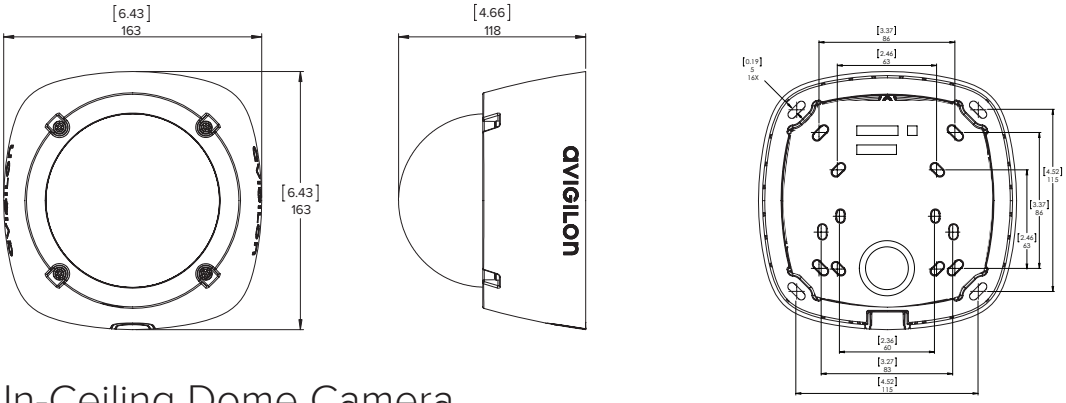


| [X.X] | INCHES |
|---|---|
| X | MM |

## In-Ceiling Dome Camera

**(H5A-DC)**

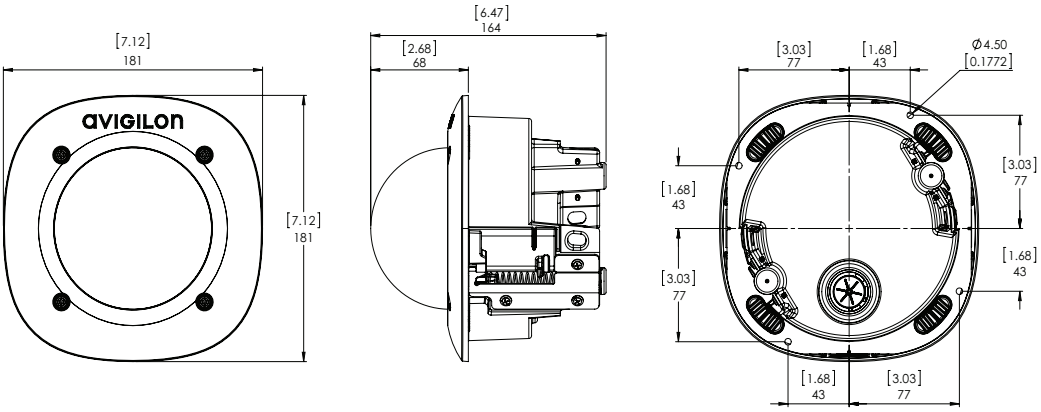

# Outline Dimensions (Con't)

## Surface Mount Outdoor Dome Camera

**(H5A-DO)**

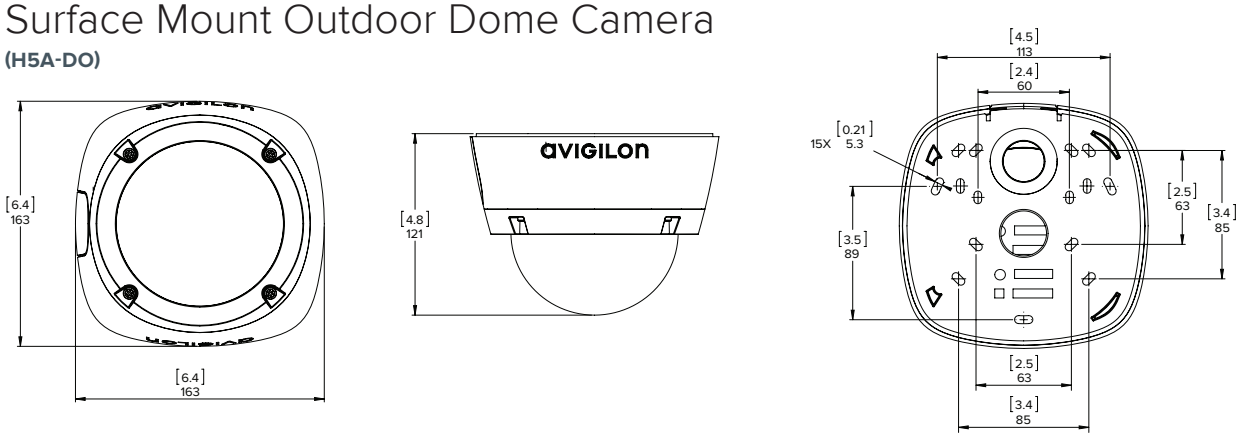


## Pendant Dome Camera

**(H5A-DP)**

**WITH NPT MOUNT (H4A-MT-NPTA1)**

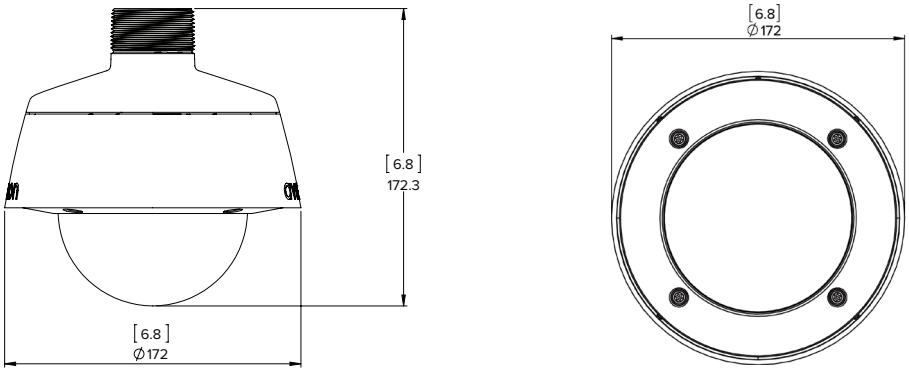


**WITH WALL MOUNT (H4A-MT-WALL1)**

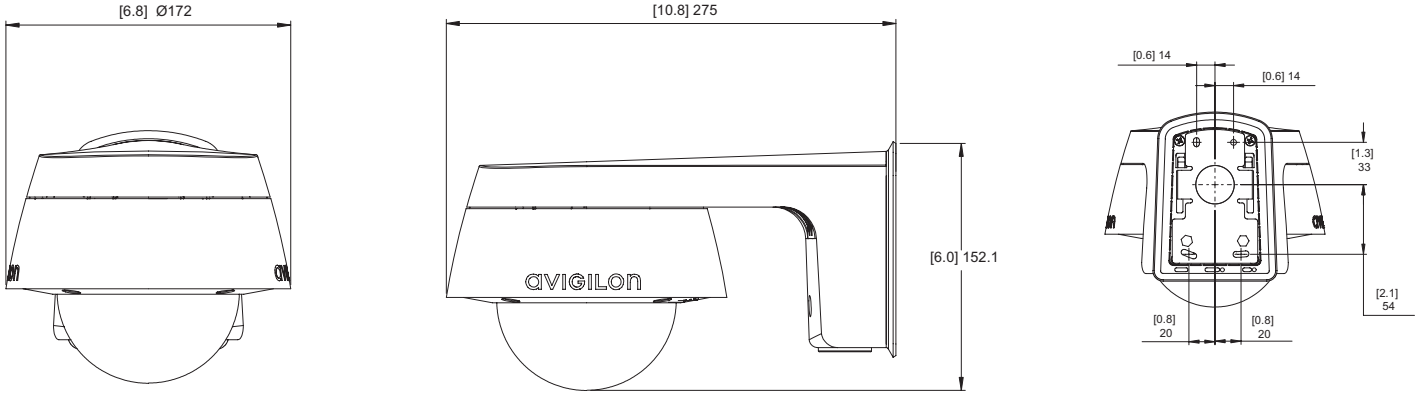


## Box Camera

**(H5A-B)**

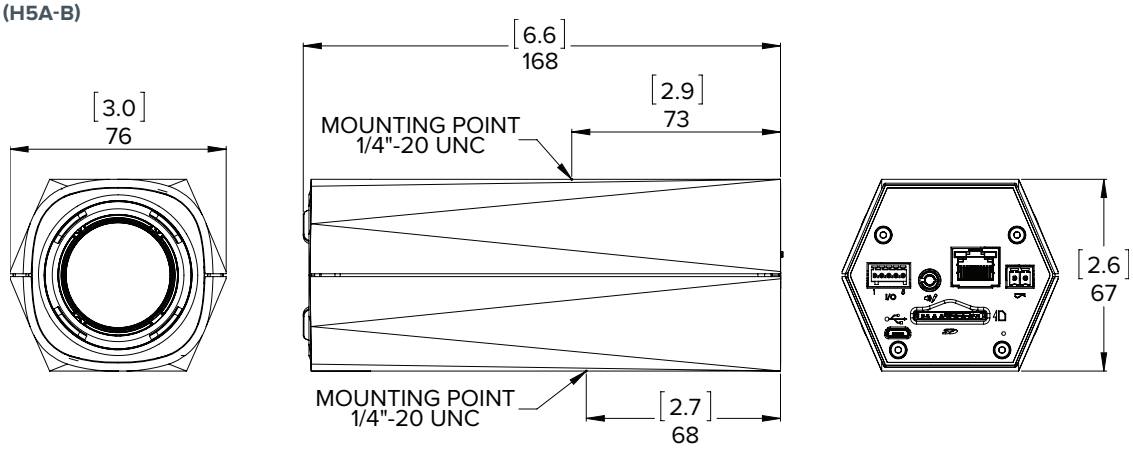

# Outline Dimensions (Con't)

## Bullet Camera

**(H5A-BO-IR)**

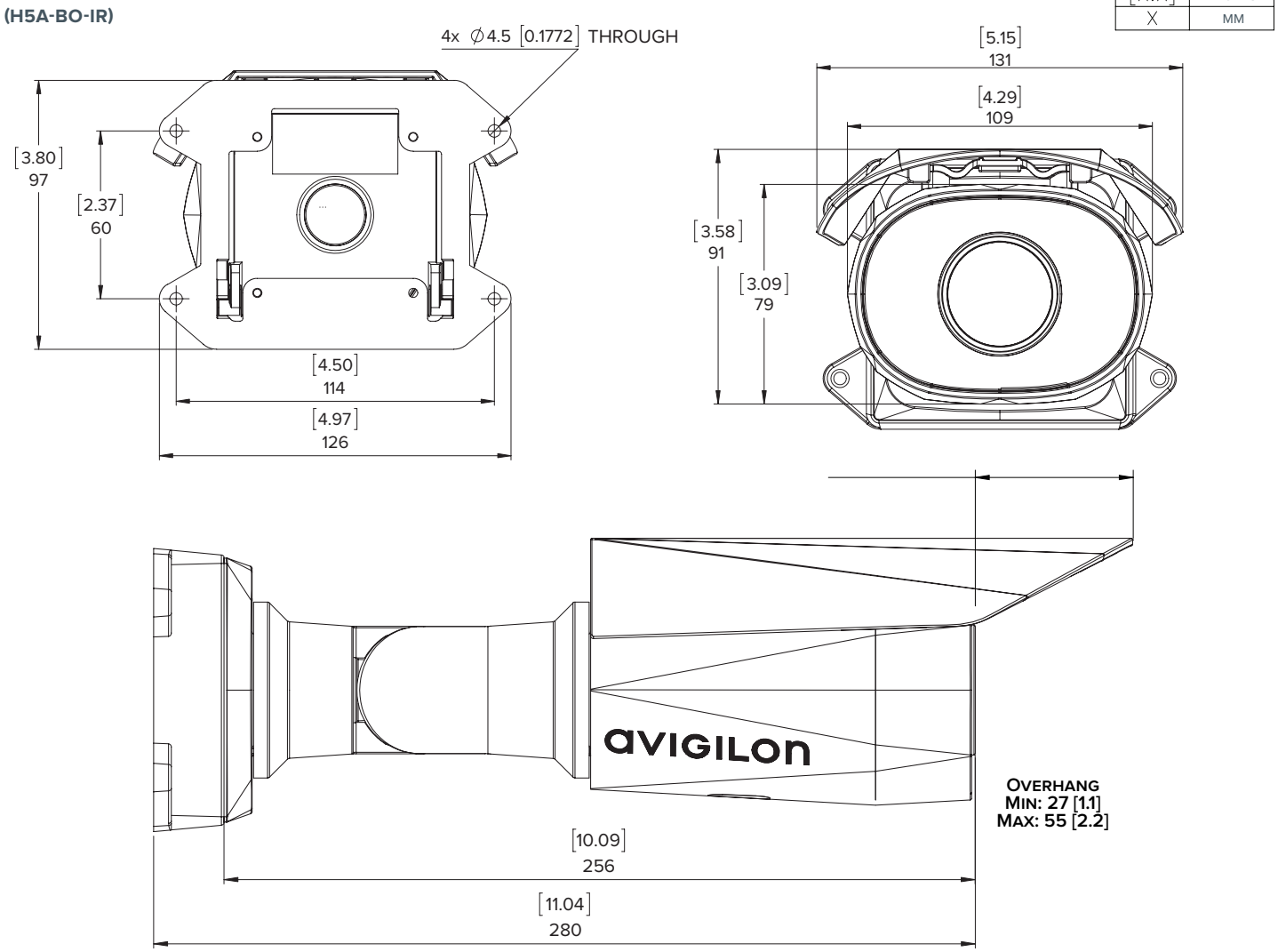


## HD Bullet Camera Junction Box

**(H4-BO-JBOX1)**

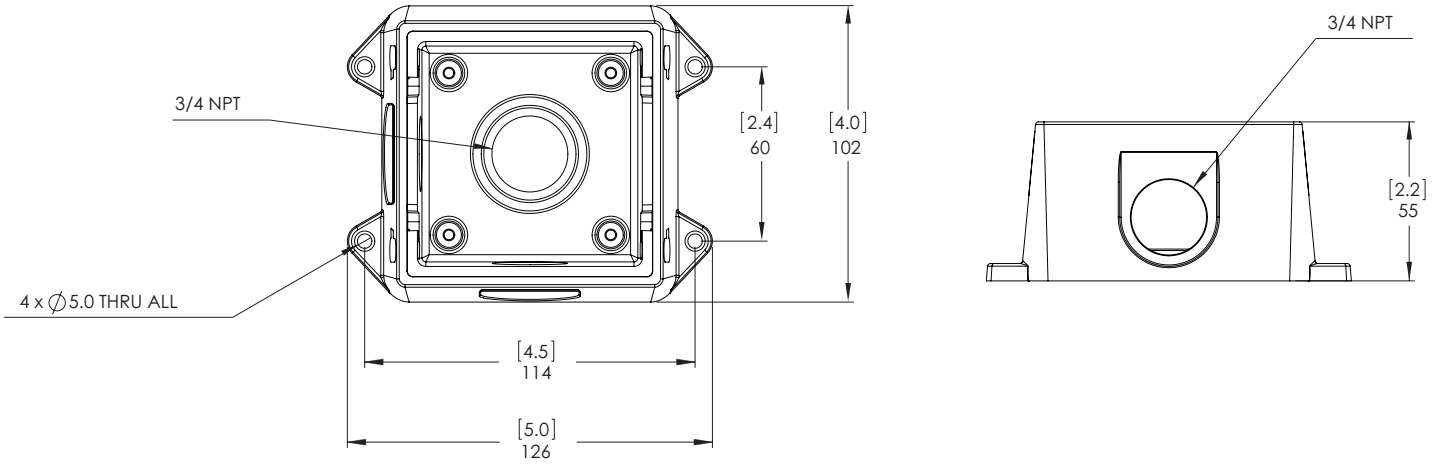

# Ordering Information (Outdoor Dome and Bullet)

## Surface Mount Outdoor Dome Camera

| (H5A-DO) | MP | WDR | LightCatcher Technology | Lens | IR | Analytics | HDSM SmartCodec |
|---|---|---|---|---|---|---|---|
| 2.0C-H5A-DO1 | 2.0 | ✓ | ✓ | 3.3 - 9 mm | | ✓ | ✓ |
| 2.0C-H5A-DO1-IR | 2.0 | ✓ | ✓ | 3.3 - 9 mm | ✓ | ✓ | ✓ |
| 2.0C-H5A-DO2 | 2.0 | ✓ | ✓ | 9 - 22 mm | | ✓ | ✓ |
| 4.0C-H5A-DO1 | 4.0 | ✓ | ✓ | 3.3 - 9 mm | | ✓ | ✓ |
| 4.0C-H5A-DO1-IR | 4.0 | ✓ | ✓ | 3.3 - 9 mm | ✓ | ✓ | ✓ |
| 4.0C-H5A-DO2 | 4.0 | ✓ | ✓ | 9 - 22 mm | | ✓ | ✓ |
| 5.0C-H5A-DO2 | 5.0 | ✓ | ✓ | 9 - 22 mm | | ✓ | ✓ |
| 6.0C-H5A-DO1 | 6.0 | ✓ | ✓ | 4.9 - 8 mm | | ✓ | ✓ |
| 6.0C-H5A-DO1-IR | 6.0 | ✓ | ✓ | 4.9 - 8 mm | ✓ | ✓ | ✓ |
| 8.0C-H5A-DO1 | 8.0 | ✓ | ✓ | 4.9 - 8 mm | | ✓ | ✓ |
| 8.0C-H5A-DO1-IR | 8.0 | ✓ | ✓ | 4.9 - 8 mm | ✓ | ✓ | ✓ |

| | |
|---|---|
| H4A-DO-SMOK1 | Outdoor dome camera cover with smoked bubble |
| H4A-DO-CLER1 | Outdoor dome camera cover with clear bubble |
| H4A-AC-GROM1 | Camera sealing grommet, pack of 10 |
| CM-AC-GROM1 | Pipe grommet, pack of 10 |
| H4-AC-WIFI2-NA / H4-AC-WIFI2-EU | USB Wi-Fi adapter |
| CM-AC-AVIO1 | 3.5 mm jack with 1.8 m fly wire |

## Pendant Mount Outdoor Dome Camera

| (H5A-DP) | MP | WDR | LightCatcher Technology | Lens | IR | Analytics | HDSM SmartCodec |
|---|---|---|---|---|---|---|---|
| 2.0C-H5A-DP1 | 2.0 | ✓ | ✓ | 3.3 - 9 mm | | ✓ | ✓ |
| 2.0C-H5A-DP1-IR | 2.0 | ✓ | ✓ | 3.3 - 9 mm | ✓ | ✓ | ✓ |
| 2.0C-H5A-DP2 | 2.0 | ✓ | ✓ | 9 - 22 mm | | ✓ | ✓ |
| 4.0C-H5A-DP1 | 4.0 | ✓ | ✓ | 3.3 - 9 mm | | ✓ | ✓ |
| 4.0C-H5A-DP1-IR | 4.0 | ✓ | ✓ | 3.3 - 9 mm | ✓ | ✓ | ✓ |
| 4.0C-H5A-DP2 | 4.0 | ✓ | ✓ | 9 - 22 mm | | ✓ | ✓ |
| 5.0C-H5A-DP2 | 5.0 | ✓ | ✓ | 9 - 22 mm | | ✓ | ✓ |
| 6.0C-H5A-DP1 | 6.0 | ✓ | ✓ | 4.9 - 8 mm | | ✓ | ✓ |
| 6.0C-H5A-DP1-IR | 6.0 | ✓ | ✓ | 4.9 - 8 mm | ✓ | ✓ | ✓ |
| 8.0C-H5A-DP1 | 8.0 | ✓ | ✓ | 4.9 - 8 mm | | ✓ | ✓ |
| 8.0C-H5A-DP1-IR | 8.0 | ✓ | ✓ | 4.9 - 8 mm | ✓ | ✓ | ✓ |

| | |
|---|---|
| H4A-DP-SMOK1 | Pendant dome camera cover with smoked bubble |
| H4A-DP-CLER1 | Pendant dome camera cover with clear bubble |
| H4A-MT-WALL1 | Indoor/outdoor pendant wall arm mount |
| H4A-MT-NPTA1 | Indoor/outdoor pendant NPT mount |
| H4-MT-POLE1 | Aluminum pole mounting bracket for pendant dome cameras |
| H4-MT-CRNR1 | Aluminum corner mounting bracket for pendant dome cameras |
| CM-AC-GROM1 | Pipe grommet, pack of 10 |
| H4-AC-WIFI2-NA / H4-AC-WIFI2-EU | USB Wi-Fi adapter |
| CM-AC-AVIO1 | 3.5 mm jack with 1.8 m fly wire |

## Outdoor Bullet Camera

| (H5A-BO-IR) | MP | WDR | LightCatcher Technology | Lens | IR | Analytics | HDSM SmartCodec |
|---|---|---|---|---|---|---|---|
| 2.0C-H5A-BO1-IR | 2.0 | ✓ | ✓ | 3.3 - 9 mm | ✓ | ✓ | ✓ |
| 2.0C-H5A-BO2-IR | 2.0 | ✓ | ✓ | 9 - 22 mm | ✓ | ✓ | ✓ |
| 4.0C-H5A-BO1-IR | 4.0 | ✓ | ✓ | 3.3 - 9 mm | ✓ | ✓ | ✓ |
| 4.0C-H5A-BO2-IR | 4.0 | ✓ | ✓ | 9 - 22 mm | ✓ | ✓ | ✓ |
| 5.0C-H5A-BO2-IR | 5.0 | ✓ | ✓ | 9 - 22 mm | ✓ | ✓ | ✓ |
| 6.0C-H5A-BO1-IR | 6.0 | ✓ | ✓ | 4.9 - 8 mm | ✓ | ✓ | ✓ |
| 8.0C-H5A-BO1-IR | 8.0 | ✓ | ✓ | 4.9 - 8 mm | ✓ | ✓ | ✓ |

| | |
|---|---|
| H4-BO-JBOX1 | Junction box for bullet cameras |
| H4-MT-POLE1 | Aluminum pole mounting bracket for bullet cameras |
| H4-MT-CRNR1 | Aluminum corner mounting bracket for bullet cameras |
| H4-AC-WIFI2-NA / H4-AC-WIFI2-EU | USB Wi-Fi adapter |

# Ordering Information (Indoor Box and Dome)

## Box Camera

| (H5A-B) | MP | WDR | LightCatcher Technology | Lens | IR | Analytics | HDSM SmartCodec |
|---|---|---|---|---|---|---|---|
| 2.0C-H5A-B1 | 2.0 | ✓ | ✓ | 4.7 - 84.6 mm | | ✓ | ✓ |
| 2.0C-H5A-B2 | 2.0 | ✓ | ✓ | 3.3 - 9 mm | | ✓ | ✓ |
| 2.0C-H5A-B3 | 2.0 | ✓ | ✓ | 9 - 22 mm | | ✓ | ✓ |
| 4.0C-H5A-B2 | 4.0 | ✓ | ✓ | 3.3 - 9 mm | | ✓ | ✓ |
| 4.0C-H5A-B3 | 4.0 | ✓ | ✓ | 9 - 22 mm | | ✓ | ✓ |
| 6.0C-H5A-B2 | 6.0 | ✓ | ✓ | 4.9 - 8 mm | | ✓ | ✓ |
| 8.0C-H5A-B2 | 8.0 | ✓ | ✓ | 4.9 - 8 mm | | ✓ | ✓ |

| | |
|---|---|
| H4-AC-WIFI2-NA / H4-AC-WIFI2-EU | USB Wi-Fi adapter |
| CM-AC-AVIO1 | 3.5 mm jack with 1.8 m fly wire |

## Surface Mount Indoor Dome Camera

| (H5A-D) | MP | WDR | LightCatcher Technology | Lens | IR | Analytics | HDSM SmartCodec |
|---|---|---|---|---|---|---|---|
| 2.0C-H5A-D1 | 2.0 | ✓ | ✓ | 3.3 - 9 mm | | ✓ | ✓ |
| 2.0C-H5A-D1-IR | 2.0 | ✓ | ✓ | 3.3 - 9 mm | ✓ | ✓ | ✓ |
| 2.0C-H5A-D2 | 2.0 | ✓ | ✓ | 9 - 22 mm | | ✓ | ✓ |
| 4.0C-H5A-D1 | 4.0 | ✓ | ✓ | 3.3 - 9 mm | | ✓ | ✓ |
| 4.0C-H5A-D1-IR | 4.0 | ✓ | ✓ | 3.3 - 9 mm | ✓ | ✓ | ✓ |
| 4.0C-H5A-D2 | 4.0 | ✓ | ✓ | 9 - 22 mm | | ✓ | ✓ |
| 6.0C-H5A-D1 | 6.0 | ✓ | ✓ | 4.9 - 8 mm | | ✓ | ✓ |
| 6.0C-H5A-D1-IR | 6.0 | ✓ | ✓ | 4.9 - 8 mm | ✓ | ✓ | ✓ |
| 8.0C-H5A-D1 | 8.0 | ✓ | ✓ | 4.9 - 8 mm | | ✓ | ✓ |
| 8.0C-H5A-D1-IR | 8.0 | ✓ | ✓ | 4.9 - 8 mm | ✓ | ✓ | ✓ |

| | |
|---|---|
| H4A-DD-SMOK1 | Indoor dome camera cover with smoked bubble |
| H4A-DD-CLER1 | Indoor dome camera cover with clear bubble |
| H4A-DD-SMOK1-BL | Black indoor dome camera cover with smoked bubble |
| H4A-DD-CLER1-BL | Black indoor dome camera cover with clear bubble |
| H4A-DD-SDWL1 | Indoor dome camera sidewall knockout plug, pack of 5 |
| H4A-DD-SDWL1-BL | Black indoor dome camera sidewall knockout plug, pack of 5 |
| H4-AC-WIFI2-NA / H4-AC-WIFI2-EU | USB Wi-Fi adapter |
| CM-AC-AVIO1 | 3.5 mm jack with 1.8 m fly wire |

## In-Ceiling Mount Indoor Dome Camera

| (H5A-DC) | MP | WDR | LightCatcher Technology | Lens | IR | Analytics | HDSM SmartCodec |
|---|---|---|---|---|---|---|---|
| 2.0C-H5A-DC1 | 2.0 | ✓ | ✓ | 3.3 - 9 mm | | ✓ | ✓ |
| 2.0C-H5A-DC1-IR | 2.0 | ✓ | ✓ | 3.3 - 9 mm | ✓ | ✓ | ✓ |
| 2.0C-H5A-DC2 | 2.0 | ✓ | ✓ | 9 - 22 mm | | ✓ | ✓ |
| 4.0C-H5A-DC1 | 4.0 | ✓ | ✓ | 3.3 - 9 mm | | ✓ | ✓ |
| 4.0C-H5A-DC1-IR | 4.0 | ✓ | ✓ | 3.3 - 9 mm | ✓ | ✓ | ✓ |
| 4.0C-H5A-DC2 | 4.0 | ✓ | ✓ | 9 - 22 mm | | ✓ | ✓ |
| 6.0C-H5A-DC1 | 6.0 | ✓ | ✓ | 4.9 - 8 mm | | ✓ | ✓ |
| 6.0C-H5A-DC1-IR | 6.0 | ✓ | ✓ | 4.9 - 8 mm | ✓ | ✓ | ✓ |
| 8.0C-H5A-DC1 | 8.0 | ✓ | ✓ | 4.9 - 8 mm | | ✓ | ✓ |
| 8.0C-H5A-DC1-IR | 8.0 | ✓ | ✓ | 4.9 - 8 mm | ✓ | ✓ | ✓ |

| | |
|---|---|
| H4A-DC-SMOK1 | In-ceiling dome camera cover with smoked bubble |
| H4A-DC-CLER1 | In-ceiling dome camera cover with clear bubble |
| H4A-DC-SMOK1-BL | Black in-ceiling dome camera cover with smoked bubble |
| H4A-DC-CLER1-BL | Black in-ceiling dome camera cover with clear bubble |
| H4-DC-CPNL1 | Metal ceiling panel |
| H4A-AC-GROM1 | Camera sealing grommet, pack of 10 |
| H4-AC-WIFI2-NA / H4-AC-WIFI2-EU | USB Wi-Fi adapter |
| CM-AC-AVIO1 | 3.5 mm jack with 1.8 m fly wire |

© 2019, Avigilon Corporation. All rights reserved. AVIGILON, the AVIGILON logo, AVIGILON CONTROL CENTER, ACC, HDSM SmartCodec and LIGHTCATCHER are trademarks of Avigilon Corporation. Other names mentioned herein may be the trademarks of their respective owners. Avigilon Corporation protects its innovations with patents issued in the United States of America and other jurisdictions worldwide: www.avigilon.com/patents. Unless stated explicitly and in writing, no license is granted with respect to any copyright, industrial design, trademark, patent or other intellectual property rights of Avigilon Corporation or its licensors.

Sep 2019 — Rev 2