avigilon™
a Motorola Solutions Company

H5A Camera Line

2 MP | 4 MP | 5 MP | 6 MP | 8 MP

Features

NEXT-GENERATION VIDEO ANALYTICS
Expanded object classifications and more accurate detection in crowded scenes so you can detect and act faster.

MADE IN NORTH AMERICA AND 5 YEAR WARRANTY
Manufactured in North America* using globally-sourced materials and North American expertise, Avigilon stands behind the quality of its products. Backed by a 5 year warranty.

H.265 WITH HDSM SMARTCODEC™ TECHNOLOGY
Optimizes compression levels for regions in a scene to help maximize bandwidth savings, helping to keep internet connectivity costs down.

FOCUS OF ATTENTION WITH ACC™ 7
Leverages AI and video analytics technologies to determine what information is important and should be presented to security operators.

TRUE WIDE DYNAMIC RANGE
Available in all resolutions, capture details in scenes with both very bright and dark areas.

LIGHTCATCHER™ TECHNOLOGY
Offers exceptional detail in areas with low lighting.

ONVIF® COMPLIANT
Built on an open platform to allow integration with other security solutions.

MULTIPLE LENS OPTIONS
Choose from various lens types, including long zoom, for flexible coverage options.

ONVIF is a trademark of Onvif, Inc.

SUPPORT asksales@avigilon.com | avigilon.com

* With manufacturing facilities in both the United States and Canada, our “Made In North America” claim only applies to products from our Plano, Texas and Richmond, British Columbia facilities.

Specifications

			2.0 MP	4.0 MP	5.0 MP	6.0 MP	8.0 MP (4K ULTRA HD)
IMAGE PERFORMANCE	Image Sensor		1/2.8” progressive scan CMOS			1/1.8” progressive scan CMOS	
	Max Resolution (H x V) and Aspect Ratio		(16:9) 1920 x 1080	(16:9) 2560 x 1440 (4:3) 2304 x 1728	(4:3) 2592 x 1944 (16:9) 2560 x 1440	(16:9) 3200 x 1800 (3:2) 3072 x 2048	(16:9) 3840 x 2160
	Dynamic Range	WDR Off	83 dB	83 dB	83 dB	85 dB	85 dB
		WDR On	126 dB (dual exposure, 30 fps) 132 dB (triple exposure, 20 fps or less)	126 dB	126 dB	120 dB	120 dB
	Max Image Rate		(50 Hz/60 Hz): 25 fps/30 fps	WDR off (50 Hz/60 Hz): 25 fps/30 fps WDR on (50 Hz/60 Hz): 20 fps/20 fps			
	Bandwidth Management		HDSM SmartCodec technology; Idle scene mode				
	3D Noise Reduction Filter		Yes				

			3.3 – 9 mm	4.9 – 8 mm	9 – 22 mm	4.7 – 84.6 mm
LENS AND IR ILLUMINATION	IR Illumination Max Distance[1] (high power 850 nm LEDs)	Dome	35 m (115 ft), full tele 15 m (49 ft), full wide	30 m (98 ft), full tele 15 m (49 ft), full wide	N/A	N/A
		Bullet	50 m (164 ft), full tele 30 m (98 ft), full wide	50 m (164 ft), full tele 30 m (98 ft), full wide	90 m (295 ft), full tele 60 m (197 ft), full wide	N/A
	Minimum Illumination	**2 MP**	0.027 lux in color mode, 0.014 lux in monochrome mode, 0 lux with IR	N/A	0.052 lux in color mode, 0.026 lux in monochrome mode, 0 lux with IR	0.039 lux in color mode, 0.02 lux in monochrome mode,
		4 MP	0.03 lux in color mode, 0.015 lux in monochrome mode, 0 lux with IR	N/A	0.058 lux in color mode, 0.029 lux in monochrome mode, 0 lux with IR	N/A
		5 MP	N/A	N/A	0.04 lux in color mode, 0.02 lux in monochrome mode, 0 lux with IR	N/A
		6 MP	N/A	0.055 lux in color mode, 0.028 lux in monochrome mode, 0 lux with IR	N/A	N/A
		8 MP	N/A	0.055 lux in color mode, 0.028 lux in monochrome mode, 0 lux with IR	N/A	N/A
	Horizontal Angle of View Based on Aspect Ratio	**2 MP**	(16:9) 34° – 99°	N/A	(16:9) 14° – 31°	(16:9) 4.1° – 60°
		4 MP	(16:9)(4:3) 34° – 92°	N/A	(16:9)(4:3) 14° – 31°	N/A
		5 MP	N/A	N/A	(16:9)(4:3) 14° – 31°	N/A
		6 MP	N/A	(16:9) 52° – 92° (3:2) 41° – 73°	N/A	N/A
		8 MP	N/A	(16:9) 52° – 92°	N/A	N/A
	Vertical Angle of View Based on Aspect Ratio	**2 MP**	(16:9) 18° – 53°	N/A	(16:9) 7.8° – 16.7°	(16:9) 2.3° – 34°
		4 MP	(16:9) 18° – 50° (4:3) 25° – 68°	N/A	(16:9) 8.2° – 17.4°	N/A
		5 MP	N/A	N/A	(16:9) 8.1° – 17.4° (4:3) 11° – 23°	N/A
		6 MP	N/A	(16:9) 29° – 51° (3:2) 27° – 48°	N/A	N/A
		8 MP	N/A	(16:9) 29° – 51°	N/A	N/A
	Max Aperture		F1.3	F1.8	F1.6	F1.6
	Control		P-Iris, Remote Focus and Zoom			

[1] IR illumination power may be reduced at higher operating temperatures.

IMAGE CONTROL	Image Compression Method	H.264 HDSM SmartCodec, H.265 HDSM SmartCodec, Motion JPEG
	Streaming	Multi-stream H.264, Multi-stream H.265, Motion JPEG; HDSM 2.0 on 4.0 MP, 5.0 MP, 6.0 MP, and 4K (8.0 MP) cameras
	Motion Detection	Pixel motion: Selectable sensitivity and threshold. Classified object detection
	Camera Tamper Detection	Yes
	Electronic Shutter Control	Automatic, Manual (1/7 to 1/8196 sec)
	Iris Control	Automatic, Open, Closed
	Day/Night Control	Automatic, Manual
	Flicker Control	60 Hz, 50 Hz
	White Balance	Automatic, Manual
	Backlight Compensation	Adjustable
	Privacy Zones	Up to 64 zones

NETWORK	Network	100BASE-TX, RJ45 Connector, CAT5e Cabling
	ONVIF	ONVIF compliance version 1.02, 2.00, Profile S, Profile T (www.onvif.org)
	Security	Password protection, HTTPS encryption, digest authentication, WS authentication, user access log, 802.1x port based authentication
	Protocols	IPv6, IPv4, HTTP, HTTPS, SOAP, DNS, NTP, RTSP, RTCP, RTP, TCP, UDP, IGMP, ICMP, DHCP, Zeroconf, ARP
	Streaming Protocols	RTP/UDP, RTP/UDP multicast, RTP/RTSP/TCP, RTP/RTSP/HTTP/TCP, RTP/RTSP/HTTPS/TCP, HTTP
	Device Management Protocols	SNMP v2c, SNMP v3

PERIPHERALS	USB Port		USB 2.0
	Onboard Storage	Dome	microSD/microSDHC/microSDXC slot – class 10/UHS-1 or better recommended
		Bullet and Box	SD/SDHC/SDXC slot – class 10/UHS-1 or better recommended

Specifications (Con't)

AUXILIARY I/O	Audio Compression Method	G.711 PCM 8 kHz
	Audio Input/Output	Line level input and output
	External I/O Terminals	Alarm In, Alarm Out
	RS-485 Terminal	Yes, Box camera only

MECHANICAL (DOME)		**INDOOR SURFACE MOUNT**	**INDOOR IN-CEILING MOUNT**	**OUTDOOR SURFACE MOUNT**
	Dimensions (LxWxH)	163 mm x 163 mm x 118 mm; 6.4" x 6.4" x 4.7"	181 mm x 181 mm x 164 mm; 7.1" x 7.1" x 6.5"	163 mm x 163 mm x 121 mm; 6.4" x 6.4" x 4.8"
	Weight	0.99 kg (2.18 lbs)	1.64 kg (3.62 lbs)	1.39 kg (3.06 lbs)
	Dome Bubble	Polycarbonate		
	Body	Plastic, Aluminum		Aluminum
	Housing	Surface mount, tamper resistant	Recessed mount, tamper resistant	Surface mount, vandal resistant
	Finish	Plastic, gray	Plastic, gray; Aluminum, powder coat, black	Powder coat, RAL 9003
	Adjustment Range	360° pan, ±180° azimuth, 9° – 95° tilt (30° – 95° with -IR option)		

MECHANICAL (PENDANT DOME)		**PENDANT CAMERA ONLY**	**WITH WALL MOUNT (H4A-MT-WALL1)**	**WITH NPT MOUNT (H4A-MT-NPTA1)**
	Dimensions (LxWxH)	172 mm x 172 mm x 124 mm; 6.8" x 6.8" x 4.9"	275 mm x 172 mm x 152.1 mm; 10.8" x 6.8" x 6.0"	172 mm x 172 mm x 172.3 mm; 6.8" x 6.8" x 6.8"
	Weight	1.59 kg (3.51 lbs)	3.04 kg (6.70 lbs)	1.84 kg (4.06 lbs)
	Dome Bubble	Polycarbonate		
	Body	Aluminum		
	Housing	Pendant mount, vandal resistant		
	Finish	Powder coat, RAL 9003		
	Adjustment Range	360° pan, ±180° azimuth, 9° – 95° tilt (30° – 95° with -IR option)		

MECHANICAL (BULLET)			
	Dimensions (LxWxH)		280 mm x 126 mm x 91 mm; 11.04" x 4.97" x 3.58" (including mounting bracket)
	Weight	Camera	1.71 kg (3.77 lbs)
		Mounting Bracket	0.21 kg (0.46 lbs)
	Body		Aluminum
	Housing		Surface mount, tamper resistant
	Finish		Powder coat, RAL 9003
	Adjustment Range		±175° pan, ±90° tilt, ±175° azimuth

MECHANICAL (BOX)		
	Dimensions (LxWxH)	168 mm x 76 mm x 67 mm; 6.6" x 3.0" x 2.6"
	Weight	0.62 kg (1.4 lbs)
	Body	Aluminum
	Camera Mount	1/4"-20 UNC (top and bottom)
	Finish	Powder coat, black

ELECTRICAL					
	Power Consumption	Bullet	13 W max		
		Dome	13 W max (11 W with no IR or IR disabled)		
		Box	7 W max		
	Power Source	Bullet	VDC: 12 V ± 10%, 13 W min	VAC: 24 V ± 10%, 15 VA min	PoE: IEEE802.3af Class 3 compliant
		Dome	VDC: 12 V ± 10%, 12 W min	VAC: 24 V ± 10%, 13 VA min	PoE: IEEE802.3af Class 3 compliant
		Box	VDC: 12 V ± 10%, 7 W min	VAC: 24 V ± 10%, 9 VA min	PoE: IEEE802.3af Class 3 compliant
	RTC Backup Battery		3V manganese lithium		

ENVIRONMENTAL			
	Operating Temperature	Bullet	-40 °C to +60 °C (-40 °F to 140 °F), in enclosed space -40 °C to +65 °C (-40 °F to 149 °F), with ambient convection
		Dome	-40 °C to +65 °C (-40 °F to 149 °F)
		Box	-10 °C to +60 °C (-14 °F to 140 °F)
	IR Illuminator Behavior	Bullet	IR illuminator will turn off if the temperature is 61 °C (141 °F) or higher. The illuminator will operate at 50% power if the temperature is between 55 °C (131 °F) and 61 °C (141 °F). Hysteresis: 5 °C (9 °F).
		Indoor Dome	IR illuminator will turn off if the temperature is 55 °C (131 °F) or higher. The illuminator will operate at 50% power if the temperature is between 44 °C (111 °F) and 55 °C (131 °F). Hysteresis: 2 °C (3.6 °F).
		Outdoor Dome	IR illuminator will turn off if the temperature is 57 °C (135 °F) or higher. The illuminator will operate at 50% power if the temperature is between 49 °C (120 °F) and 57 °C (135 °F). Hysteresis: 2 °C (3.6 °F).
	Storage Temperature		-10 °C to +70 °C (14 °F to 158 °F)
	Humidity		0 - 95% non-condensing

CERTIFICATIONS			
	Certifications/Directives		UL, cUL, CE, ROHS, Reach (SVHC), RCM
	Safety		UL 62368-1, CSA 62368-1, IEC/EN 62368-1, IEC 62471 (with -IR option)
	Environ-mental	Bullet	UL/CSA/IEC 60950-22, IEC 60529 IP66 and IP67 Weather Rating, IEC 62262 IK10 Impact Rating
		Outdoor Dome	UL/CSA/IEC 60950-22, IEC 60529 IP66 and IP67 Weather Rating, IEC 62262 IK10 Impact Rating
	Electromagnetic Emissions		FCC Part 15 Subpart B Class B, IC ICES-003 Class B, EN 55032 Class B, EN 61000-6-3, EN 61000-3-2, EN 61000-3-3
	Electromagnetic Immunity		EN 55024, EN 61000-6-1

Analytics Specifications

SUPPORTED ANALYTICS EVENTS	Objects in Area	The event is triggered when the selected object type moves into the region of interest.
	Object Loitering	The event is triggered when the selected object type moves into the region of interest and then stays for an extended amount of time.
	Objects Crossing Beam	The event is triggered when the specified number of objects have crossed the directional beam that is configured over the camera's field of view. The beam can be unidirectional or bidirectional.
	Object Appears or Enters Area	The event is triggered by each object that enters the region of interest. This event can be used to count objects.
	Object Not Present in Area	The event is triggered when no objects are present in the region of interest.
	Objects Enter Area	The event is triggered when the specified number of objects have entered the region of interest.
	Objects Leave Area	The event is triggered when the specified number of objects have left the region of interest.
	Object Stops in Area	The event is triggered when an object moves into a region of interest and then stops moving for the specified threshold time.
	Direction Violated	The event is triggered when an object moves in the prohibited direction of travel.
	Tamper Detection	The event is triggered when the scene unexpectedly changes.
SUPPORTED CLASSIFIED OBJECT TYPES	Object Types in Outdoor Mode	Vehicle, sub-types: Car, Truck, Bicycle, Motorcycle, Bus Person
	Object Types in Indoor Mode	Person
TEACH BY EXAMPLE	Teach By Example	Yes, when used with Avigilon Control Center™
AVIGILON CONTROL CENTER (ACC) VERSIONS SUPPORTED FEATURES	ACC Version 6.14.12 or higher	All supported analytic events with two types of classified objects: person or vehicle. Appearance search when paired with appropriate server hardware. H.265 supported.
	ACC Version 7.2 or higher	All supported analytic events with people and vehicles and all vehicle sub-types as classified objects. Appearance search when paired with appropriate server hardware. H.265 supported.

Outline Dimensions

Surface Mount Indoor Dome Camera

(H5A-D)

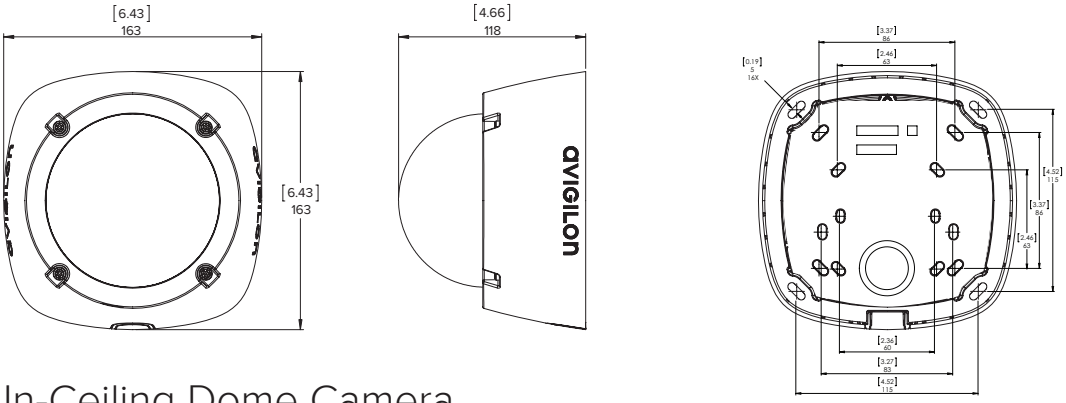

[X.X]	INCHES
X	MM

In-Ceiling Dome Camera

(H5A-DC)

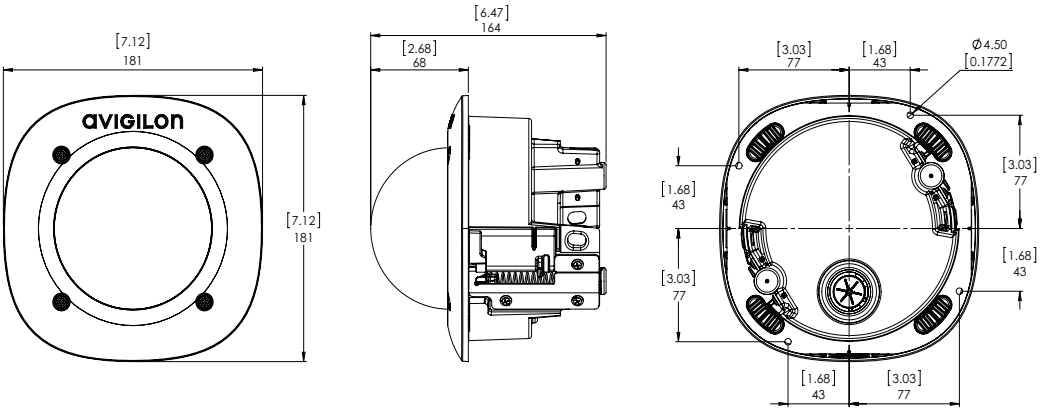

Outline Dimensions (Con't)

Surface Mount Outdoor Dome Camera

(H5A-DO)

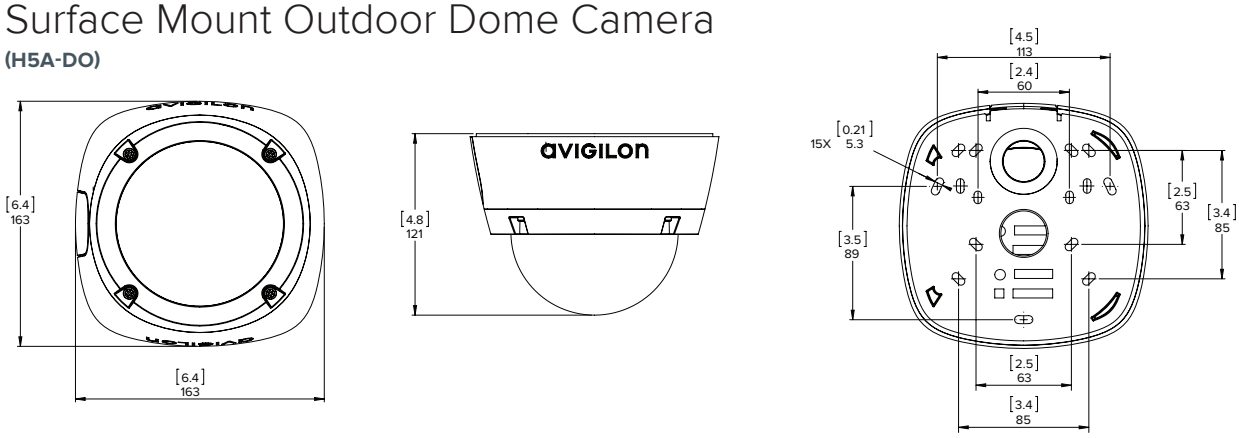

Pendant Dome Camera

(H5A-DP)

WITH NPT MOUNT (H4A-MT-NPTA1)

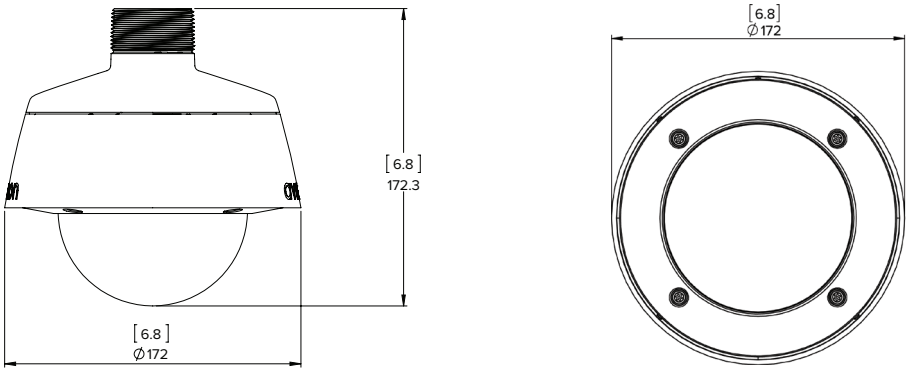

WITH WALL MOUNT (H4A-MT-WALL1)

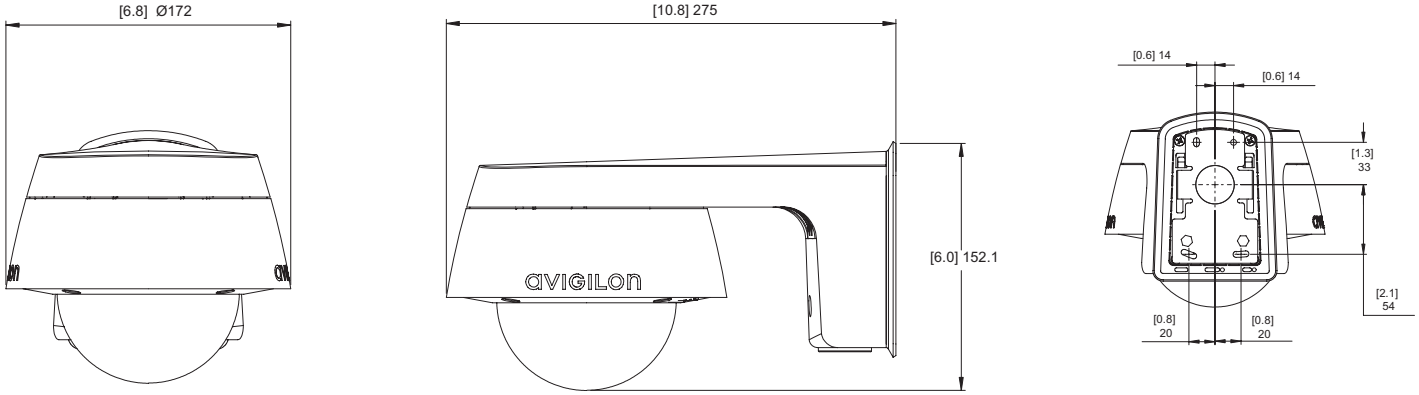

Box Camera

(H5A-B)

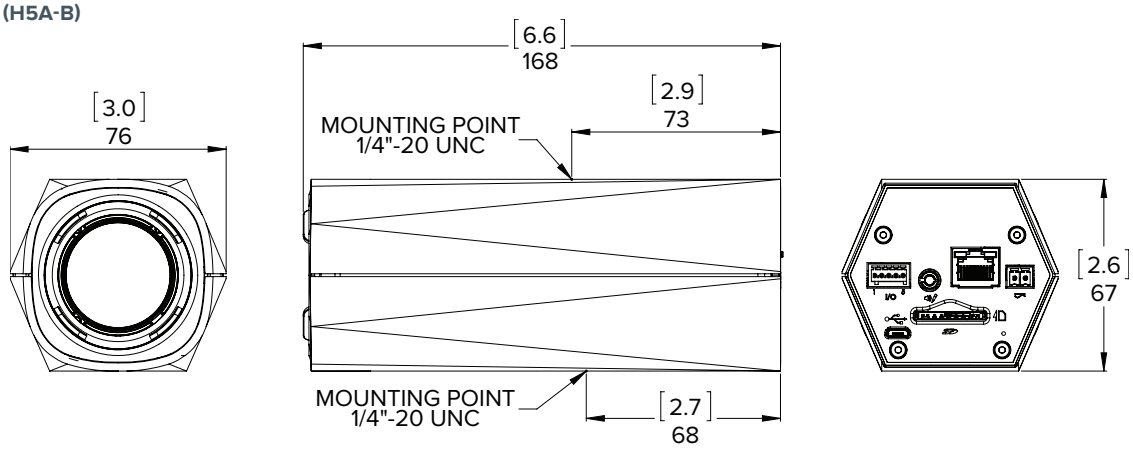

Outline Dimensions (Con't)

Bullet Camera

(H5A-BO-IR)

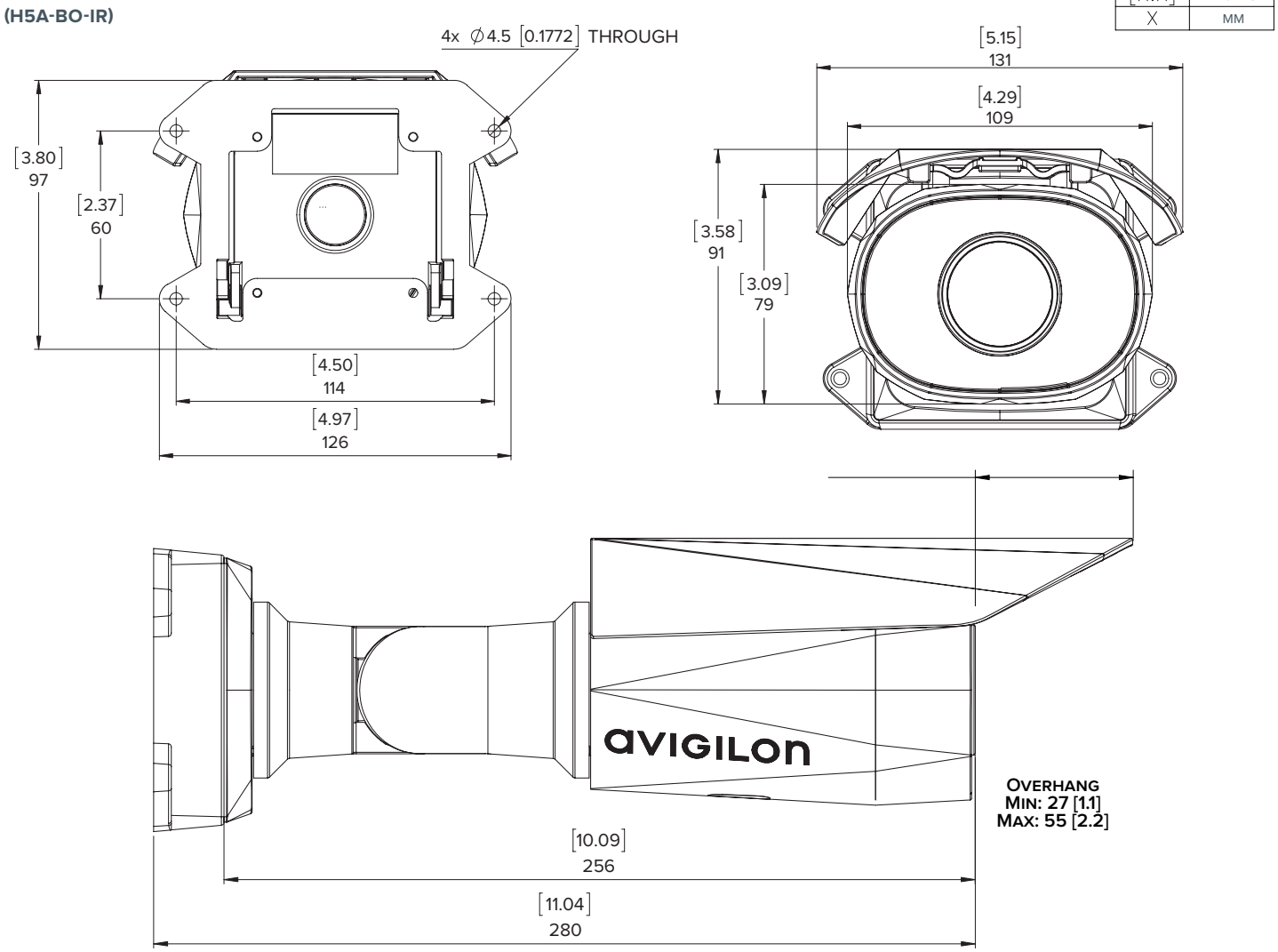

HD Bullet Camera Junction Box

(H4-BO-JBOX1)

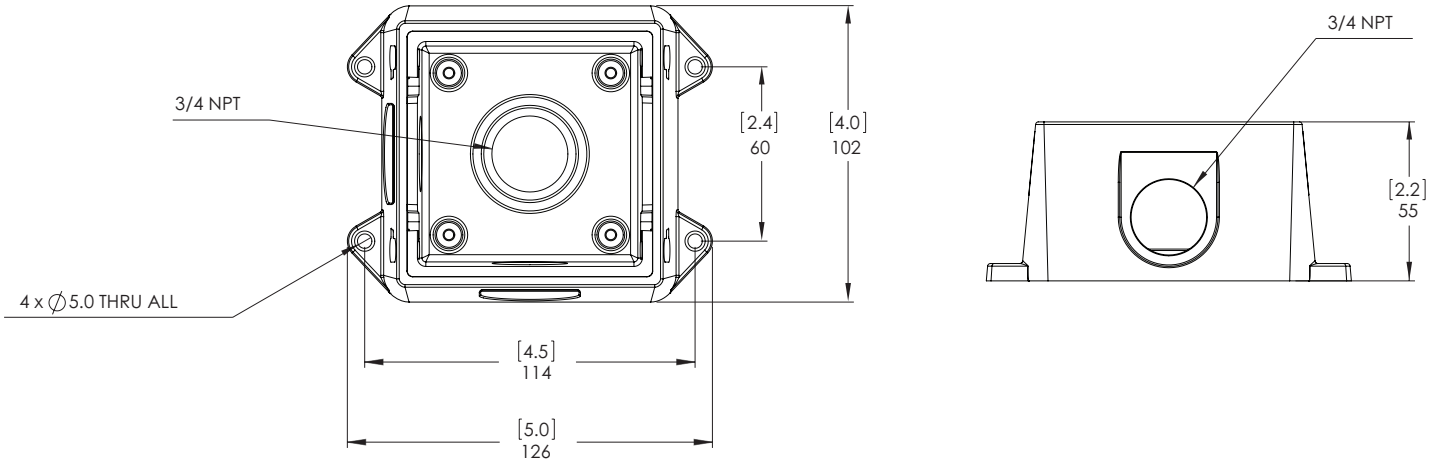

Ordering Information (Outdoor Dome and Bullet)

Surface Mount Outdoor Dome Camera

(H5A-DO)	MP	WDR	LightCatcher Technology	Lens	IR	Analytics	HDSM SmartCodec
2.0C-H5A-DO1	2.0	✓	✓	3.3 - 9 mm		✓	✓
2.0C-H5A-DO1-IR	2.0	✓	✓	3.3 - 9 mm	✓	✓	✓
2.0C-H5A-DO2	2.0	✓	✓	9 - 22 mm		✓	✓
4.0C-H5A-DO1	4.0	✓	✓	3.3 - 9 mm		✓	✓
4.0C-H5A-DO1-IR	4.0	✓	✓	3.3 - 9 mm	✓	✓	✓
4.0C-H5A-DO2	4.0	✓	✓	9 - 22 mm		✓	✓
5.0C-H5A-DO2	5.0	✓	✓	9 - 22 mm		✓	✓
6.0C-H5A-DO1	6.0	✓	✓	4.9 - 8 mm		✓	✓
6.0C-H5A-DO1-IR	6.0	✓	✓	4.9 - 8 mm	✓	✓	✓
8.0C-H5A-DO1	8.0	✓	✓	4.9 - 8 mm		✓	✓
8.0C-H5A-DO1-IR	8.0	✓	✓	4.9 - 8 mm	✓	✓	✓

H4A-DO-SMOK1	Outdoor dome camera cover with smoked bubble
H4A-DO-CLER1	Outdoor dome camera cover with clear bubble
H4A-AC-GROM1	Camera sealing grommet, pack of 10
CM-AC-GROM1	Pipe grommet, pack of 10
H4-AC-WIFI2-NA / H4-AC-WIFI2-EU	USB Wi-Fi adapter
CM-AC-AVIO1	3.5 mm jack with 1.8 m fly wire

Pendant Mount Outdoor Dome Camera

(H5A-DP)	MP	WDR	LightCatcher Technology	Lens	IR	Analytics	HDSM SmartCodec
2.0C-H5A-DP1	2.0	✓	✓	3.3 - 9 mm		✓	✓
2.0C-H5A-DP1-IR	2.0	✓	✓	3.3 - 9 mm	✓	✓	✓
2.0C-H5A-DP2	2.0	✓	✓	9 - 22 mm		✓	✓
4.0C-H5A-DP1	4.0	✓	✓	3.3 - 9 mm		✓	✓
4.0C-H5A-DP1-IR	4.0	✓	✓	3.3 - 9 mm	✓	✓	✓
4.0C-H5A-DP2	4.0	✓	✓	9 - 22 mm		✓	✓
5.0C-H5A-DP2	5.0	✓	✓	9 - 22 mm		✓	✓
6.0C-H5A-DP1	6.0	✓	✓	4.9 - 8 mm		✓	✓
6.0C-H5A-DP1-IR	6.0	✓	✓	4.9 - 8 mm	✓	✓	✓
8.0C-H5A-DP1	8.0	✓	✓	4.9 - 8 mm		✓	✓
8.0C-H5A-DP1-IR	8.0	✓	✓	4.9 - 8 mm	✓	✓	✓

H4A-DP-SMOK1	Pendant dome camera cover with smoked bubble
H4A-DP-CLER1	Pendant dome camera cover with clear bubble
H4A-MT-WALL1	Indoor/outdoor pendant wall arm mount
H4A-MT-NPTA1	Indoor/outdoor pendant NPT mount
H4-MT-POLE1	Aluminum pole mounting bracket for pendant dome cameras
H4-MT-CRNR1	Aluminum corner mounting bracket for pendant dome cameras
CM-AC-GROM1	Pipe grommet, pack of 10
H4-AC-WIFI2-NA / H4-AC-WIFI2-EU	USB Wi-Fi adapter
CM-AC-AVIO1	3.5 mm jack with 1.8 m fly wire

Outdoor Bullet Camera

(H5A-BO-IR)	MP	WDR	LightCatcher Technology	Lens	IR	Analytics	HDSM SmartCodec
2.0C-H5A-BO1-IR	2.0	✓	✓	3.3 - 9 mm	✓	✓	✓
2.0C-H5A-BO2-IR	2.0	✓	✓	9 - 22 mm	✓	✓	✓
4.0C-H5A-BO1-IR	4.0	✓	✓	3.3 - 9 mm	✓	✓	✓
4.0C-H5A-BO2-IR	4.0	✓	✓	9 - 22 mm	✓	✓	✓
5.0C-H5A-BO2-IR	5.0	✓	✓	9 - 22 mm	✓	✓	✓
6.0C-H5A-BO1-IR	6.0	✓	✓	4.9 - 8 mm	✓	✓	✓
8.0C-H5A-BO1-IR	8.0	✓	✓	4.9 - 8 mm	✓	✓	✓

H4-BO-JBOX1	Junction box for bullet cameras
H4-MT-POLE1	Aluminum pole mounting bracket for bullet cameras
H4-MT-CRNR1	Aluminum corner mounting bracket for bullet cameras
H4-AC-WIFI2-NA / H4-AC-WIFI2-EU	USB Wi-Fi adapter

Ordering Information (Indoor Box and Dome)

Box Camera

(H5A-B)	MP	WDR	LightCatcher Technology	Lens	IR	Analytics	HDSM SmartCodec
2.0C-H5A-B1	2.0	✓	✓	4.7 - 84.6 mm		✓	✓
2.0C-H5A-B2	2.0	✓	✓	3.3 - 9 mm		✓	✓
2.0C-H5A-B3	2.0	✓	✓	9 - 22 mm		✓	✓
4.0C-H5A-B2	4.0	✓	✓	3.3 - 9 mm		✓	✓
4.0C-H5A-B3	4.0	✓	✓	9 - 22 mm		✓	✓
6.0C-H5A-B2	6.0	✓	✓	4.9 - 8 mm		✓	✓
8.0C-H5A-B2	8.0	✓	✓	4.9 - 8 mm		✓	✓

H4-AC-WIFI2-NA / H4-AC-WIFI2-EU	USB Wi-Fi adapter
CM-AC-AVIO1	3.5 mm jack with 1.8 m fly wire

Surface Mount Indoor Dome Camera

(H5A-D)	MP	WDR	LightCatcher Technology	Lens	IR	Analytics	HDSM SmartCodec
2.0C-H5A-D1	2.0	✓	✓	3.3 - 9 mm		✓	✓
2.0C-H5A-D1-IR	2.0	✓	✓	3.3 - 9 mm	✓	✓	✓
2.0C-H5A-D2	2.0	✓	✓	9 - 22 mm		✓	✓
4.0C-H5A-D1	4.0	✓	✓	3.3 - 9 mm		✓	✓
4.0C-H5A-D1-IR	4.0	✓	✓	3.3 - 9 mm	✓	✓	✓
4.0C-H5A-D2	4.0	✓	✓	9 - 22 mm		✓	✓
6.0C-H5A-D1	6.0	✓	✓	4.9 - 8 mm		✓	✓
6.0C-H5A-D1-IR	6.0	✓	✓	4.9 - 8 mm	✓	✓	✓
8.0C-H5A-D1	8.0	✓	✓	4.9 - 8 mm		✓	✓
8.0C-H5A-D1-IR	8.0	✓	✓	4.9 - 8 mm	✓	✓	✓

H4A-DD-SMOK1	Indoor dome camera cover with smoked bubble
H4A-DD-CLER1	Indoor dome camera cover with clear bubble
H4A-DD-SMOK1-BL	Black indoor dome camera cover with smoked bubble
H4A-DD-CLER1-BL	Black indoor dome camera cover with clear bubble
H4A-DD-SDWL1	Indoor dome camera sidewall knockout plug, pack of 5
H4A-DD-SDWL1-BL	Black indoor dome camera sidewall knockout plug, pack of 5
H4-AC-WIFI2-NA / H4-AC-WIFI2-EU	USB Wi-Fi adapter
CM-AC-AVIO1	3.5 mm jack with 1.8 m fly wire

In-Ceiling Mount Indoor Dome Camera

(H5A-DC)	MP	WDR	LightCatcher Technology	Lens	IR	Analytics	HDSM SmartCodec
2.0C-H5A-DC1	2.0	✓	✓	3.3 - 9 mm		✓	✓
2.0C-H5A-DC1-IR	2.0	✓	✓	3.3 - 9 mm	✓	✓	✓
2.0C-H5A-DC2	2.0	✓	✓	9 - 22 mm		✓	✓
4.0C-H5A-DC1	4.0	✓	✓	3.3 - 9 mm		✓	✓
4.0C-H5A-DC1-IR	4.0	✓	✓	3.3 - 9 mm	✓	✓	✓
4.0C-H5A-DC2	4.0	✓	✓	9 - 22 mm		✓	✓
6.0C-H5A-DC1	6.0	✓	✓	4.9 - 8 mm		✓	✓
6.0C-H5A-DC1-IR	6.0	✓	✓	4.9 - 8 mm	✓	✓	✓
8.0C-H5A-DC1	8.0	✓	✓	4.9 - 8 mm		✓	✓
8.0C-H5A-DC1-IR	8.0	✓	✓	4.9 - 8 mm	✓	✓	✓

H4A-DC-SMOK1	In-ceiling dome camera cover with smoked bubble
H4A-DC-CLER1	In-ceiling dome camera cover with clear bubble
H4A-DC-SMOK1-BL	Black in-ceiling dome camera cover with smoked bubble
H4A-DC-CLER1-BL	Black in-ceiling dome camera cover with clear bubble
H4-DC-CPNL1	Metal ceiling panel
H4A-AC-GROM1	Camera sealing grommet, pack of 10
H4-AC-WIFI2-NA / H4-AC-WIFI2-EU	USB Wi-Fi adapter
CM-AC-AVIO1	3.5 mm jack with 1.8 m fly wire

© 2019, Avigilon Corporation. All rights reserved. AVIGILON, the AVIGILON logo, AVIGILON CONTROL CENTER, ACC, HDSM SmartCodec and LIGHTCATCHER are trademarks of Avigilon Corporation. Other names mentioned herein may be the trademarks of their respective owners. Avigilon Corporation protects its innovations with patents issued in the United States of America and other jurisdictions worldwide: www.avigilon.com/patents. Unless stated explicitly and in writing, no license is granted with respect to any copyright, industrial design, trademark, patent or other intellectual property rights of Avigilon Corporation or its licensors.

Sep 2019 — Rev 2