Day/Night H.264 HD Outdoor Dome Cameras

Avigilon offers a broad range of high definition cameras – from 1 – 5 MP and 4 – 7K (based on horizontal resolution) – and are available in a variety of formats, including dome, panoramic and fixed. Whether it's a small storefront that requires a few cameras or a large complex system requiring complete coverage of numerous areas, you can trust that you're getting an exceptional solution for your security needs.

The innovative H.264 HD outdoor dome cameras are just one way Avigilon can help provide the very best monitoring and protection.

The H.264 HD outdoor dome cameras are a great solution for monitoring both daytime and nighttime activities, with peace of mind due to their vandal resistant construction. They feature an integrated lens for remote focus and zoom control and are ONVIF compliant for no-hassle integration. The outdoor dome cameras operate on Avigilon's H3 platform, providing these models with improved low light performance with wide dynamic range support and enhanced HDSM™ software features. P-Iris control also allows the cameras to automatically set their iris position to maximize image quality in all lighting conditions, while onboard storage capabilities let you manage storage directly on the cameras using a standard SD memory card. These cameras are extremely versatile and can work in almost any location, including banks, schools, retail outlets, municipal grounds and buildings, hotels, bars and restaurants.

KEY FEATURES

- Progressive scan CMOS sensor
- Unsurpassed image quality
- Available with 3-9 mm F1.2 or 9-22 mm F1.6 P-Iris lens with remote focus and zoom
- Up to 30 images per second
- Wide Dynamic Range
- SD card slot for onboard storage support
- H.264 and Motion JPEG compression
- ONVIF API compliance with version 1.02, 2.00 and Profile S
- Zoom and content adaptive integrated IR (Infrared) LEDs provide uniform illumination in the dark, even at 0 lux, up to a maximum of 15 m (50 ft) away
- Power over Ethernet, 24 VAC or 12 VDC power input
- Analog Video Output
- Vandal resistant construction and IP66 compliant

Specifications

		1.3 MP (LIGHTCATCHER™)	1.0 MP	2.0 MP	3.0 MP	5.0 MP
IMAGE PERFORMANCE	Image Sensor	1/3" progressive scan CMOS	1/2.7" progressive scan CMOS		WDR 1/3" progressive scan CMOS	1/3.2" progressive scan CMOS
	Active Pixels	1280 (H) x 1024 (V)	1280 (H) x 720 (V)	1920 (H) x 1080 (V)	2048 (H) x 1536 (V)	2592 (H) x 1944 (V)
	Imaging Area	4.8 mm (H) x 3.84 mm (V); 0.189" (H) x 0.151" (V)	5.9 mm (h) x 3.3 mm (V); 0.231" (H) x 0.129" (V)		4.5 mm (H) x 3.4 mm (V); 0.177" (H) x 0.133" (V)	4.6 mm (H) x 3.4 mm (V); 0.181" (H) x 0.133" (V)
	Minimum Illumination 3-9 mm lens:	0.02 lux (F1.2) in color mode; 0.002 lux (F1.2) in monochrome mode	0.2 lux (F1.2) in color mode; 0.02 lux (F1.2) in monochrome mode			0.3 lux (F1.2) in color mode; 0.03 lux (F1.2) in monochrome mode
	Minimum Illumination 9-22 mm lens:	0.04 lux (F1.6) in color mode; 0.004 lux (F1.6) in monochrome mode	0.4 lux (F1.6) in color mode; 0.04 lux (F1.6) in monochrome mode			0.6 lux (F1.6) in color mode; 0.06 lux (F1.6) in monochrome mode
	Dynamic Range	71 dB	69 dB		100 dB	69 dB
	Image Rate	30 (all resolutions)			20 (at full resolution)	13 (at 1920 x 1080 or smaller for 4:3 aspect ratios)
					30 (at 1920 x 1080 or smaller)	30 (at 1920 x 1080 or smaller for 16:9 aspect ratios)
	Resolution Scaling	Down to 768 x 432			Down to 480 x 360	

LENS	Lens	3-9 mm, F1.2, P-Iris, remote focus and zoom		
		9-22 mm, F1.6, P-Iris, remote focus and zoom		
	Angle of View 3-9 mm lens:	30° - 88°	35° - 98°	28° - 84°
	Angle of View 9-22 mm lens:	13° - 30°	15° - 35°	12° - 28°

IMAGE CONTROL	Image Compression Method	H.264 (MPEG-4 Part 10/AVC), Motion JPEG
	Streaming	Multi-stream H.264 and Motion JPEG
	Motion Detection	Selectable sensitivity and threshold
	Electronic Shutter Control	Automatic, Manual (1/6 to 1/2000 sec) Automatic, Manual (1/6 to 1/8000 sec)
	Iris Control	Automatic, Manual
	Day/Night Control	Automatic, Manual
	Flicker Control	50 Hz, 60 Hz
	White Balance	Automatic, Manual
	Backlight Compensation	Adjustable
	Privacy Zones	Up to 64 zones
	Audio Compression Method	G.711 PCM 8 kHz
	Audio Input/Output	Line level input and output, A/V mini-jack (3.5 mm)
	Video Output	NTSC/PAL, A/V mini-jack (3.5 mm)
	External I/O Terminals	Alarm In, Alarm Out
	IR Illumination (option)	3-9 mm lens: (Surface Mount Indoor Camera without LightCatcher Technology) 850 nm wavelength, 15 m (50 ft) max. distance of IR illumination at 0 lux
NETWORK	Network	100BASE-TX
	Cabling Type	CAT5
	Connector	RJ-45
	API	ONVIF compliance version 1.02, 2.00, Profile S (www.onvif.org)
	Security	Password protection, HTTPS encryption, digest authentication, WS authentication, user access log, 802.1x port based authentication
	Protocol	IPv4, HTTP, HTTPS, SOAP, DNS, NTP, RTSP, RTCP, RTP, TCP,UDP, IGMP, ICMP, DHCP, Zeroconf, ARP
	Streaming Protocols	RTP/UDP, RTP/UDP multicast, RTP/RTSP/TCP, RTP/RTSP/HTTP/TCP, RTP/RTSP/HTTPS/TCP, HTTP

		SURFACE MOUNT OUTDOOR DOME CAMERA	PENDANT DOME CAMERA
MECHANICAL	Dimensions (ØxH)	152.3 mm x 109.9 mm; 6.0" x 4.3"	167 mm x 157 mm; 6.6" x 6.2"
	Weight	1.28 kg (2.82 lbs)	2.1 kg (4.6 lbs)
	Dome Bubble	Polycarbonate, clear	
	Body	Aluminum	
	Housing	Surface mount, vandal resistant	Pendant mount, vandal resistant
	Finish	Powder coat, cool gray 2	
	Adjustment Range	360° pan, 180° tilt (122° tilt with -IR option), 180° azimuth	
	Onboard Storage	SD/SDHC/SDXC slot – minimum class 4; class 6 or better recommended	
ELECTRICAL	Power Consumption	9 W (10 W for -IR option)	
	Power Source	VDC: 12 V +/- 10%, 10 W min (10 W min with -IR option) VAC: 24 V +/- 10%, 12 VA min (12 VA min with -IR option) PoE: IEEE802.3af Class 3 compliant	
	Power Connector	2-pin terminal block	
	RTC Backup Battery	3V Manganese Lithium	
ENVIRONMENTAL	Operating Temperature	-30 °C to +50 °C (-22 °F to 122 °F)	
	Storage Temperature	-10 °C to +70 °C (14 °F to 158 °F)	
	Humidity	0-95% non-condensing	

CERTIFICATIONS	Certifications	UL cUL	CE ROHS	WEEE RCM	EAC KC		
	Safety	UL 60950-1	CSA 60950-1	IEC/EN 60950-1	IEC 62471 (only for models with IR-Illuminators)		
	Environmental	UL/CSA/IEC 60950-22	IEC 60529 IP66 Rating	IK10 Impact Rating			
	Electromagnetic Emissions	FCC Part 15 Subpart B Class B	IC ICES-003 Class B	EN 55022 Class B	EN 61000-6-3	EN 61000-3-2	EN 61000-3-3
	Electromagnetic Immunity	EN 55024		EN 61000-6-1			

Outline Dimensions

Surface Mount Outdoor Dome Camera

(H3-DO)

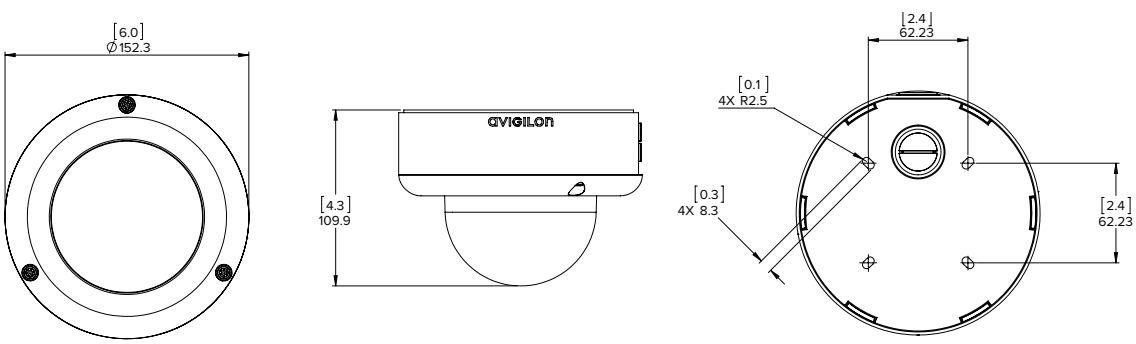

[X.X]	INCHES
X	MM

Pendant Dome Camera

(H3-DP)

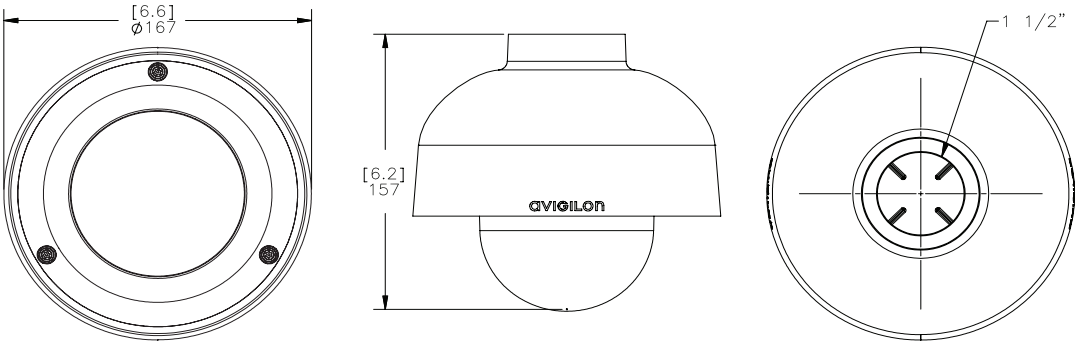

Ordering Information

SURFACE MOUNT OUTDOOR DOME CAMERAS	
1.0-H3-DO1	1.0 Megapixel Day/Night H.264 HD 3-9 mm Outdoor Dome Camera
1.0-H3-DO1-IR	1.0 Megapixel Day/Night H.264 HD 3-9 mm Outdoor Dome Camera with IR Illuminator
1.0-H3-DO2	1.0 Megapixel Day/Night H.264 HD 9-22 mm Outdoor Dome Camera
1.3L-H3-DO1	1.3 Megapixel H.264 HD 3-9 mm Outdoor Dome Camera with LightCatcher Technology
1.3L-H3-DO2	1.3 Megapixel H.264 HD 9-22 mm Outdoor Dome Camera with LightCatcher Technology
2.0-H3-DO1	2.0 Megapixel Day/Night H.264 HD 3-9 mm Outdoor Dome Camera
2.0-H3-DO1-IR	2.0 Megapixel Day/Night H.264 HD 3-9 mm Outdoor Dome Camera with IR Illuminator
2.0-H3-DO2	2.0 Megapixel Day/Night H.264 HD 9-22 mm Outdoor Dome Camera
3.0W-H3-DO1	3.0 Megapixel WDR Day/Night H.264 HD 3-9 mm Outdoor Dome Camera
3.0W-H3-DO1-IR	3.0 Megapixel WDR Day/Night H.264 HD 3-9 mm Outdoor Dome Camera with IR Illuminator
3.0W-H3-DO2	3.0 Megapixel WDR Day/Night H.264 HD 9-22 mm Outdoor Dome Camera
5.0-H3-DO1	5.0 Megapixel Day/Night H.264 HD 3-9 mm Outdoor Dome Camera
5.0-H3-DO1-IR	5.0 Megapixel Day/Night H.264 HD 3-9 mm Outdoor Dome Camera with IR Illuminator
5.0-H3-DO2	5.0 Megapixel Day/Night H.264 HD 9-22 mm Outdoor Dome Camera
H3-DOP-SMOKE	Dome Camera Cover with Smoked Bubble
PENDANT DOME CAMERAS	
1.0-H3-DP1	1.0 Megapixel Day/Night H.264 HD 3-9mm Pendant Dome Camera
1.0-H3-DP2	1.0 Megapixel Day/Night H.264 HD 9-22mm Pendant Dome Camera
1.3L-H3-DP1	1.3 Megapixel H.264 HD 3-9 mm Pendant Dome Camera with LightCatcher Technology
1.3L-H3-DP2	1.3 Megapixel H.264 HD 9-22 mm Pendant Dome Camera with LightCatcher Technology
2.0-H3-DP1	2.0 Megapixel Day/Night H.264 HD 3-9mm Pendant Dome Camera
2.0-H3-DP2	2.0 Megapixel Day/Night H.264 HD 9-22mm Pendant Dome Camera
3.0W-H3-DP1	3.0 Megapixel WDR Day/Night H.264 HD 3-9mm Pendant Dome Camera
3.0W-H3-DP2	3.0 Megapixel WDR Day/Night H.264 HD 9-22mm Pendant Dome Camera
5.0-H3-DP1	5.0 Megapixel Day/Night H.264 HD 3-9mm Pendant Dome Camera
5.0-H3-DP2	5.0 Megapixel Day/Night H.264 HD 9-22mm Pendant Dome Camera
H3-DOP-SMOKE	Dome Camera Cover with Smoked Bubble
MNT-PEND-WALL	Indoor/Outdoor Pendant Mount Bracket

© 2014-2016, Avigilon Corporation. All rights reserved. AVIGILON and the AVIGILON logo are trademarks of Avigilon Corporation. Other product names mentioned herein may be the trademarks of their respective owners. The absence of the symbols ™ and ® in proximity to each trademark in this document is not a disclaimer of ownership of the related trademark. Avigilon Corporation protects its innovations with patents issued in the United States of America and other jurisdictions worldwide: www.avigilon.com/patents. Unless stated explicitly and in writing, no license is granted with respect to any copyright, industrial design, trademark, patent or other intellectual property rights of Avigilon Corporation or its licensors.

May.2016—Rev3