HD Micro Dome Cameras

Avigilon offers a broad range of high definition cameras – from 1 – 5 MP and 4 – 7K (based on horizontal resolution) – and are available in a variety of formats, including dome, panoramic and fixed. Whether it's a small storefront that requires a few cameras or a large complex system requiring complete coverage of numerous areas, you can trust that you're getting an exceptional solution for your security needs.

The innovative HD Micro Dome cameras are just one way Avigilon can help provide the very best monitoring and protection.

The HD Micro Dome cameras are the industry's smallest high-definition dome cameras, enabling a cost-effective transition into HD video surveillance and all the advantages of the Avigilon Control Center software. Available in surface, in-ceiling, and pendant mount form factors, the HD Micro Dome cameras truly deliver a versatile solution for monitoring activities in a variety of environments including indoor or outdoor building entrances and hallways. An ideal solution for applications in retail, hospitality, financial & banking and commercial.

KEY FEATURES

- Progressive scan CMOS sensor
- Unsurpassed image quality
- 30 images per second at full resolution
- Three versatile form factors for quick and easy installation
- Factory focused for quick and easy installation
- 86° horizontal angle of view allows for full room coverage from any corner
- H.264 and Motion JPEG compression
- ONVIF API Compliance with version 1.02, 2.00 and Profile S
- Surface variant ready for all environments with IP66 weather rating
- Power over Ethernet

Specifications

		IN-CEILING	SURFACE	PENDANT
IMAGE PERFORMANCE	Image Sensor	1/3.6" progressive scan CMOS		
	Active Pixels	1.0 MP: 1280 (H) x 720 (V)	2.0 MP: 1920 (H) x 1080 (V)	
	Imaging Area	4.22 mm (H) x 2.38 mm (V); 0.166" (H) x 0.094" (V)		
	Minimum Illumination	0.6 lux (F2.0) in color mode		
	Dynamic Range	72.4 dB		
	Image Rate	30 (all resolutions)		
LENS	Lens	2.8 mm, F2.0		
	Angle of View	86°		
IMAGE CONTROL	Image Compression Method	H.264 (MPEG-4 Part 10/AVC), Motion JPEG		
	Motion Detection	Selectable sensitivity and threshold		
	Electronic Shutter Control	Automatic, Manual (1/8 to 1/8000 sec)		
	Flicker Control	50 Hz, 60 Hz		
	White Balance	Automatic, Manual		
	Backlight Compensation	Adjustable		
	Privacy Zones	Up to 64 zones		
NETWORK	Network	100BASE-TX		
	Cabling Type	CAT5		
	Connector	RJ-45		
	API	ONVIF compliance version 1.02, 2.00, Profile S (www.onvif.org)		
	Security	Password protection, HTTPS encryption, digest authentication, WS authentication, user access log, 802.1x port based authentication.		
	Protocol	IPv4, HTTP, HTTPS, SOAP, DNS, NTP, RTSP, RTCP, RTP, TCP,UDP, IGMP, ICMP, DHCP, Zeroconf, ARP RTP/UDP		
	Streaming Protocol	RTP/UDP multicast, RTP/RTSP/TCP, RTP/RTSP/HTTP/TCP, RTP/RTSP/HTTPS/TCP, HTTP		
MECHANICAL	Dimensions (ØxH)	91.00 mm x 107.54 mm; 3.58" x 4.23"	37.6 mm x 51 mm; 1.48" x 2.01"	77.20 mm x 153.80 mm; 3.03" x 6.06"
	Weight	150 g (5.29 oz) + 36 g (1.27 oz) for cable	34 g (1.19 oz) + 36 g (1.27 oz) for cable	466 g (16.44 oz) + 58 g (2.05 oz) for adapter
	Body	Plastic		Aluminum
	Housing	Recessed mount	Surface mount, tamper resistant	Pendant mount, vandal resistant, Includes a 1.5 inch NPT male adapter and a 3/4 inch NPT female adapter
	Finish	Plastic, RAL 9003 (RAL 9005 for -BL model)	Plastic, RAL 9003	Powder coat, RAL 9003 (RAL 9005 for -BL model)
	Adjustment Range	360° pan, 90° tilt, 360° azimuth	± 40° pan, ± 40° tilt, 120° azimuth	360° pan, 90° tilt, 360° azimuth
ELECTRICAL	Power Consumption	4 W max.		
	Power Source	PoE: IEEE802.3af Class 1 compliant		
ENVIRONMENTAL	Operating Temperature	-10 °C to +50 °C (14 °F to 122 °F)		
	Storage Temperature	-30 °C to +70 °C (-22 °F to 158 °F)		
	Humidity	0 - 95% non-condensing		
CERTIFICATIONS		**IN CEILING**	**SURFACE**	**PENDANT**
	Certifications	UL cUL KC	CE ROHS WEEE KC	RCM EAC KC
	Safety	UL 60950-1	CSA 60950-1	IEC/EN 60950-1
	Environmental		Meets IP66 Weather Rating (Camera Only)	Meets IP55 Weather Rating IK10 Impact Rating
	Electromagnetic Emissions	FCC Part 15 Subpart B Class B	IC ICES 003 Class B	EN 55022 Class B
	Electromagnetic Immunity	EN 55024	EN 61000-6-1	
ORDERING INFORMATION	1.0-H3M-DC1	1.0 Megapixel H.264 HD 2.8 mm In-Ceiling Micro Dome Camera		
	1.0-H3M-DC1-BL	1.0 Megapixel H.264 HD 2.8 mm In-Ceiling Micro Dome Camera - Black		
	1.0-H3M-DO1	1.0 Megapixel H.264 HD 2.8 mm Surface Micro Dome Camera		
	1.0-H3M-DP1	1.0 Megapixel H.264 HD 2.8 mm Pendant Micro Dome Camera		
	1.0-H3M-DP1-BL	1.0 Megapixel H.264 HD 2.8 mm Pendant Micro Dome Camera - Black		
	2.0-H3M-DC1	2.0 Megapixel H.264 HD 2.8 mm In-Ceiling Micro Dome Camera		
	2.0-H3M-DC1-BL	2.0 Megapixel H.264 HD 2.8 mm In-Ceiling Micro Dome Camera - Black		
	2.0-H3M-DO1	2.0 Megapixel H.264 HD 2.8 mm Surface Micro Dome Camera		
	2.0-H3M-DP1	2.0 Megapixel H.264 HD 2.8 mm Pendant Micro Dome Camera		
	2.0-H3M-DP1-BL	2.0 Megapixel H.264 HD 2.8 mm Pendant Micro Dome Camera - Black		

Outline Dimensions

In-Ceiling

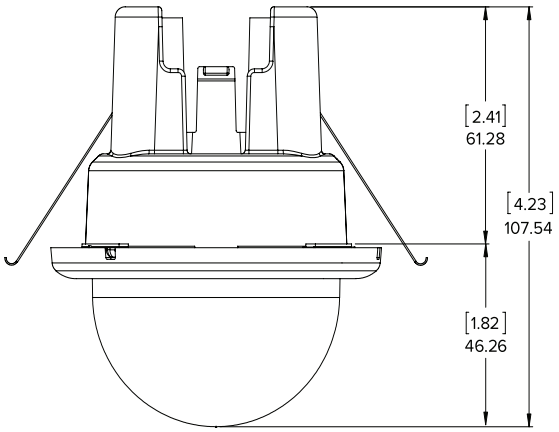

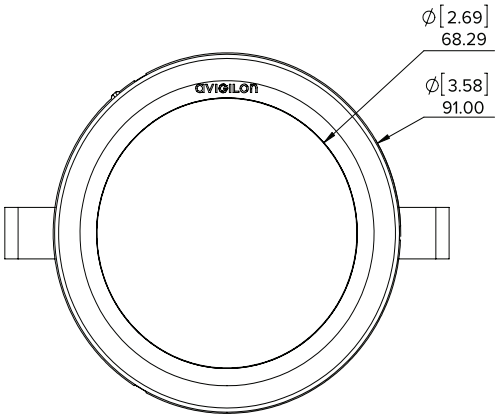

Surface

[X.X]	
X	MM

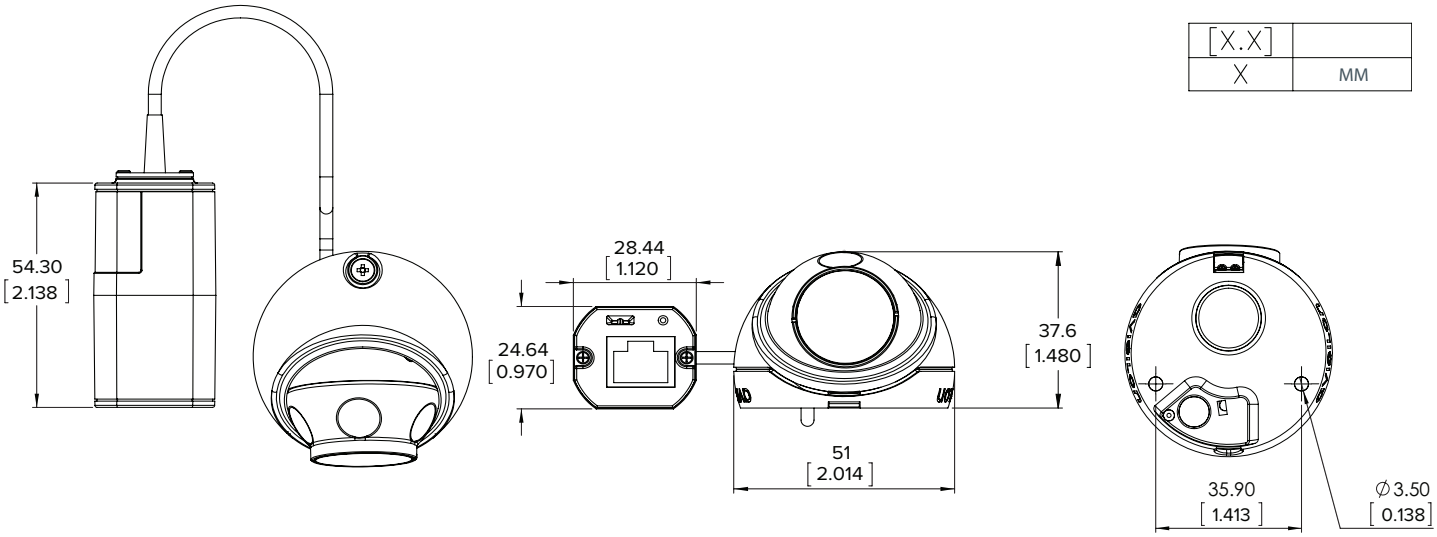

Pendant

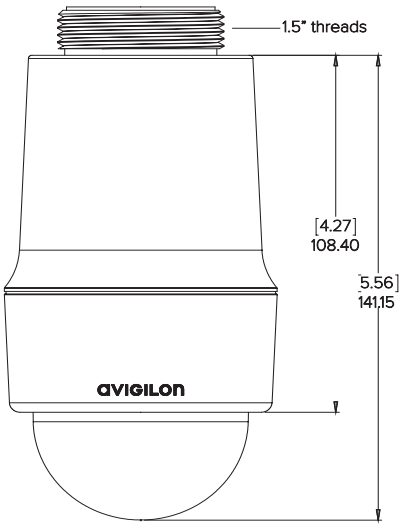

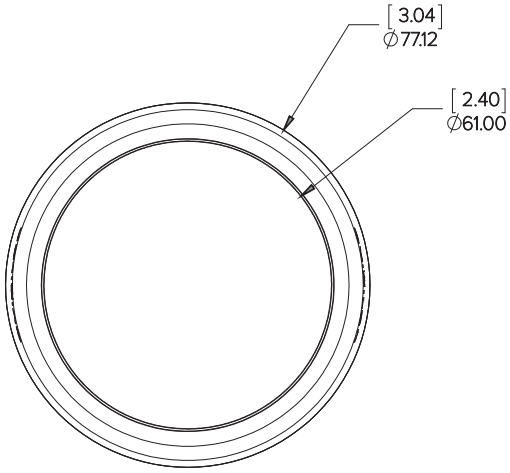

© 2014-2016, Avigilon Corporation. All rights reserved. AVIGILON, the AVIGILON logo, and AVIGILON CONTROL CENTER are trademarks of Avigilon Corporation. Other product names mentioned herein may be the trademarks of their respective owners. The absence of the symbols ™ and ® in proximity to each trademark in this product or its packaging is not a disclaimer of ownership of the related trademark. Unless expressly stated in writing, no license is granted with respect to any copyright, industrial design, trademark, patent or other intellectual property rights of Avigilon Corporation or its licensors

May.2016—Rev2